PROINVEST

Unlimited Steel Solutions

PROINVEST Tooling

SCUDAS®

Scule de debitare / *Cutting tools*

Scule de deformare / *Press brake tools*

Stante si matrite / *Dies and molds*

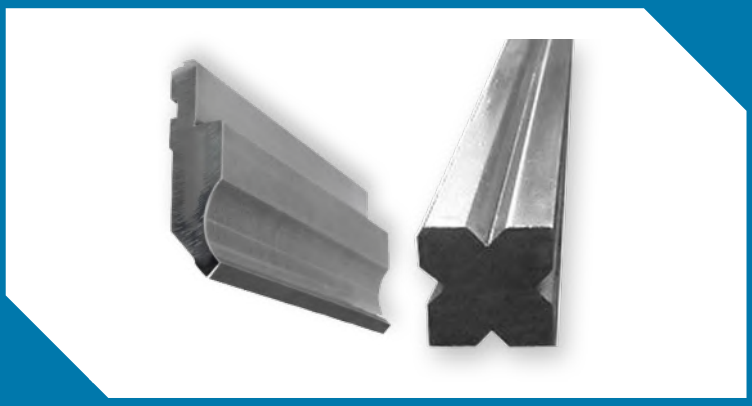

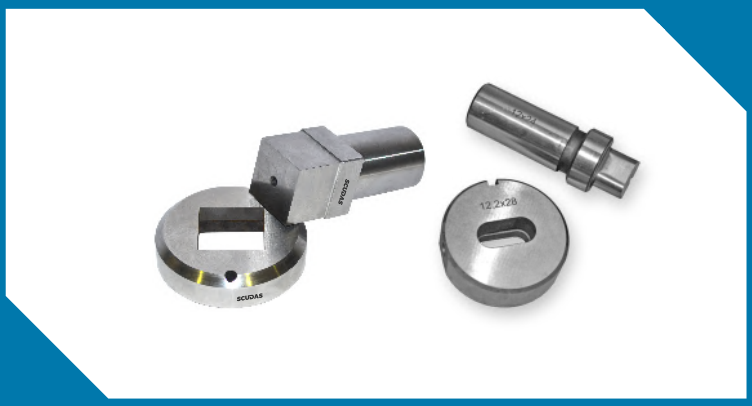

www.proinvestgroup.ro
office@proinvestgroup.ro

Locatie / *Location*

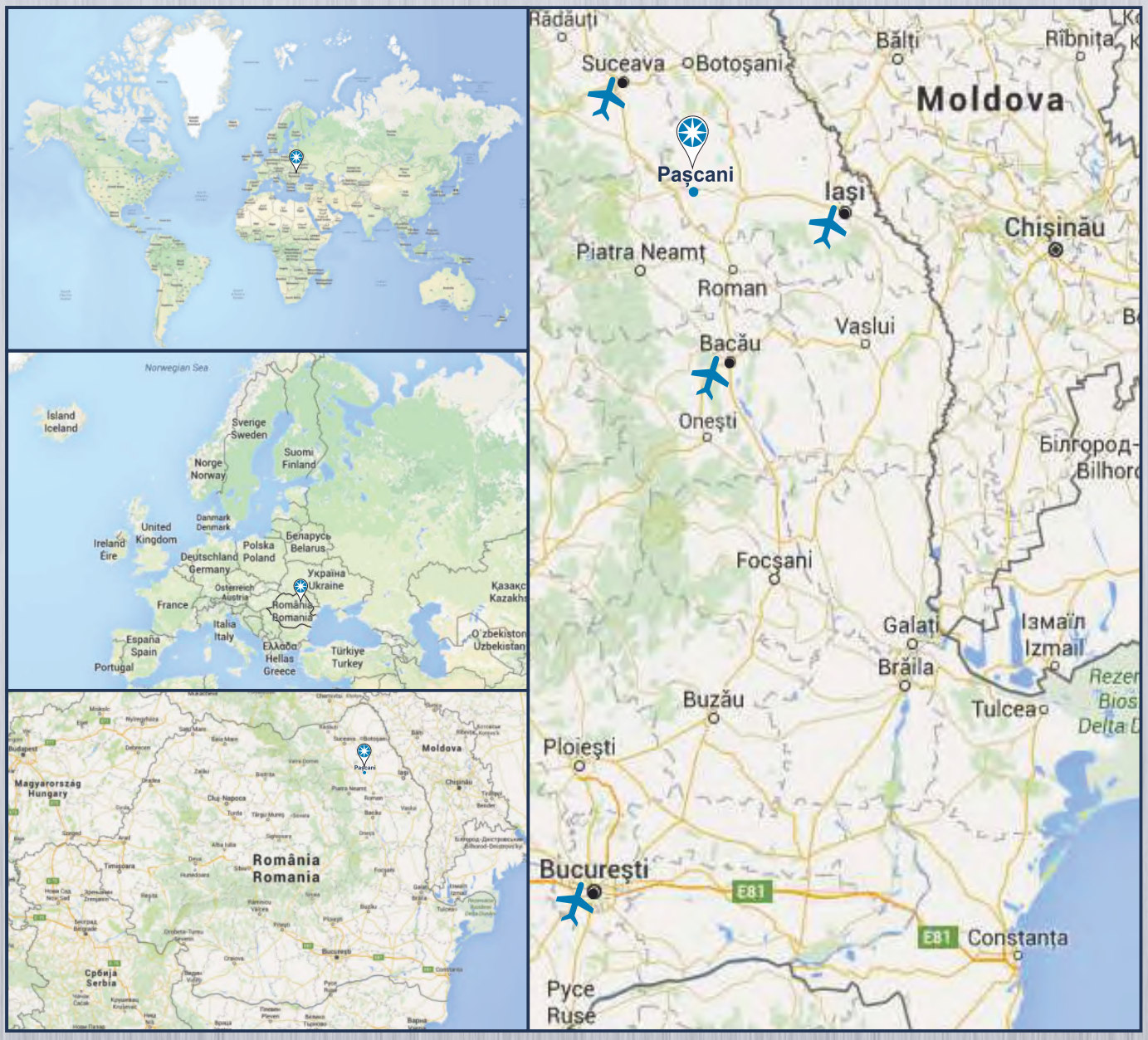

Cuprins / *Index*

Cutite circulare
Rotary slitting knives

Cutitele circulare marca Scudas sunt realizate din otel aliat pentru scule. Cutitele sunt tratate termic in baia de saruri pentru a spori performanta si durabilitatea, garantand o calitate superioara a marginii.Materialele de cea mai buna calitate pe care le folosim asigura producerea unor discuri cu o durabilitate de cel mai inalt grad. Cutitele circulare au suprafetele laterale lepuite iar diametrele interioare si exterioare sunt rectificate. Cutitele circulare pot fi realizate si dupa modele specifice, in concordanta cu specificatiile clientului, cu tolerante garantate, potrivit graficelor atasate. Orice toleranta speciala pentru paralelism, planeitate si alezaj poate fi executat conform cerintelor clientului. Tolerantele garantate privesc paralelismul, planeitatea si grosimea cutitelor rotative. Precizia la grosime le garanteaza o asamblare perfecta si o calitate execeptionala. Grosimea cutitelor circulare este gravata pe fiecare disc. Aceste cutite pot fi utilizate pentru toata gama de grosimi comerciale a tabelelor din otel.

Caracteristici

Rezistenta maxima la uzura
Stabilitate dimensionala
Duritate adecvata
Rezistenta maxima la ciobire
Demagnetizate

Scudas rotary slitter knives are made of alloyed tool steel. The knives are heat treated in the salt bath to enhance performance and durability, guaranteeing superior edge quality. The best quality materials we use ensure the production of discs with the highest degree of durability. Rotary slitter knives have lapped side surfaces and the inner and outer diameters are rectified. Rotary slitter knives can also be made according to specific patterns, according to customer specifications, with guaranteed tolerances, according to attached tabels. Any special tolerance for parallelism, flatness and bore can be done according to customer requirements. Guaranteed tolerances regard parallelism, flatness, and the thickness of rotary slitter knives. Thickness accuracy guarantees a perfect assembly and an exceptional quality. The thickness of the rotary slitter knives is engraved on each disc. The thickness of the rotary slitter knives is engraved on each disc. SCUDAS rotary slitter knives can be used for the entire range of commercial steel sheets.

Characteristics

Maximum wear resistance
Dimensional stability
Appropriate hardness
Maximum chipping resistance
Demagnetized

Cutite rotative *Rotary slitter knives*	Duritate *Hardness* (mm)	Grosime *Thickness* (mm)	Diametru exterior *Exterior diameter* (mm)	Diamentru interior *Interior diameter* (mm)
Min	59 HRC	10	100	40
Max	61 HRC	25	350	220

Cutite circulare
Rotary slitting knives

Tipuri de otel folosite in fabricarea cutitelor / *Types of steel used in knife manufacturing*

ISO 4957:1999	EN 10027-2:1992	Aplicatii / *Applications*
X210Cr12	1.2080	Dimenisuni subtiri pentru materiale feroase si neferoase *Thin gauge of ferrous and non-ferrous materials*
X153CrMoV12	1.2379	Dimensiuni medii pentru otel inox, otel pentru tratament termic, otel siliconic si gabarite groase pentru materiale neferoase *Medium gauge mildsteel and thin gauge stainlless steel, silicon steel, heat treated steel and thick gauges of non-ferrous materials*
X40CrMoV5-1	1.2344	Dimensiuni mari din otel inoxidabil si otel moale, din otel structural cu duritate ridicata in care duritatea este importanta. *Heavy gauges of stainless steel and mild steel, structural steel with high hardness where toughness is important*
X100CrMoV8-1-1	1.2990	Otel structural, cu continut ridicat de mangan si carbon. Material de inatla rezistenta de pana la 1600 Mpa, otel rezistent la caldura. *Structural steel, construction steel (with high manganese and carbon content) high strenght material up to 1600Mpa, heat treatable steel*
55NiCrMoV7	1.2714	Se recoamand taierea ecartamentului mediu si greu, dar este necesar un grad mediu de duritate. *Medium and heavy gauges for narrow and tight slitting with high quality of slit edge*
HS-5-2C	1.3343(HSS)	Gabarituri subtiri si extrasubtiri: pentru o taiere ingusta si stransa, cu o calitate superioara a marginii taiate. *Thin and extra thin gauges for narrow and tight slitting with high quality of slit edge*

Otel / *Steel*	Rezistenta la tractiune / *Tensile strenght*	Prin calire / *Through hardening*	Durtitate / *Toughness*	Rezistenta la uzura / *Wear resistance*
1.2080	+++	++	0	+++
1.2344	+	+	+++	+
1.2379	+++	+++	+	+++
1.2714	+	+++	+++	+
1.2990	+++	+++	++	++
1.3343	+++	+++	+	+++

Distantiere din otel
Steel spacers

Distantierele de otel marca Scudas pot fi realizate din mai multe tipuri de otel aliat special si sunt tratate termic. Acest tip de distantiere se utilizeaza impreuna cu distantierele captusite cu poliuretan pentru ajustarea precisa a spatiului dintre doua cutite. Otelurile aliate speciale folosite pentru fabricarea distantierelor de otel sunt special adaptatate pentru a asigura o durata de functionare mai lunga. Distantierele din otel sunt fabricate in pas zecimal pentru realizarea diferitelor latimi de taiere. Grosimea distantierelor este gravata pe fiecare disc. Orice toleranta speciala pentru paralelism, planeitate si alezaj poate fi facuta conform graficului de tolerante.

Caracteristici

Rezistenta maxima la uzura
Stabilitate dimensionala
Duritate adecvata scopului in care sunt uttilizate
Rezistenta maxima la ciobire
Demagnetizate

Scudas steel spacers can be made of several types of specially alloyed steel and are heat treated. This type of spacers is used together with polyurethane-bonded spacers to precisely adjust the space between two knives. The special alloyed steels used to make steel spacers are specially adapted to ensure a longer service life. Steel spacers are manufactured in decimal steps to achieve different cutting widths. The thickness of the spacers is engraved on each disc. Any special tolerance for parallelism, flatness and boring may be made according to the tolerance graph.

Characteristics

Maximum wear resistance
Dimensional stability
Appropriate hardness
Maximum chipping resistance
Demagnetized

Distantiere din otel *Steel spacers*	Duritate *Hardness* (mm)	Grosime *Thickness* (mm)	Diametru exterior *Exterior diameter* (mm)	Diamentru interior *Interior diameter* (mm)
Min	56 HRC	3	70	40
Max	57 HRC	100	290	220

Distantiere circulare captusite cu poliuretan
Polyurethane bonded stripper rings

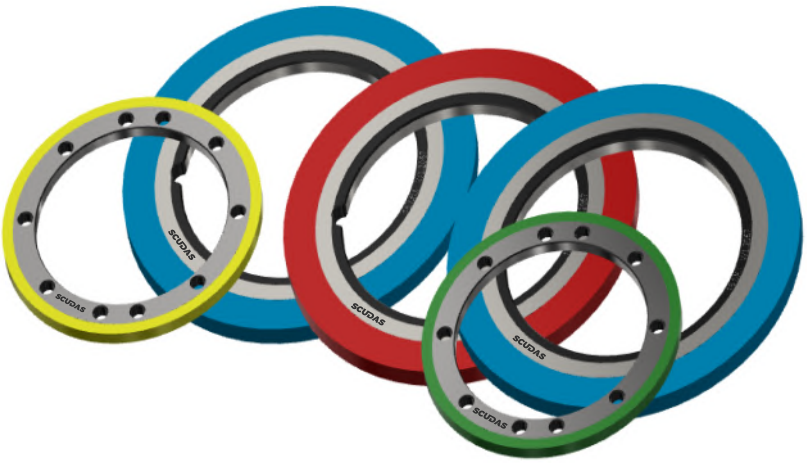

Distantiere captusite cu poliuretan sunt realizate dintr-un inel de otel aliat de scule tratat termic, caruia i se adauga un strat de poliuretan. Acesta poate fi poliuretan PUR rosu 75-80 shore A sau poliuretan PUR albastru 85-90 shore A. Poliuretanul PUR este rezistent la actiunea uleiurilor dar si la temperaturi de pana la 120° C. Stratul de poliuretan PUR are proprietati mecanice, fizice si de amortizare excelente. Poliuretanul manifesta rezistenta la abraziune, conductivitate termica scazuta si rezistenta ridicata. Distantierele sunt executate cu aceleasi tolerante de planeitate si paralelism ca si cutitele circulare. Acest tip de produse este gandit pentru a functiona la standarde ridicate de acuratete dar si pentru a fi usor de inlocuit. Grosimea distantierelor captusite cu poliuretan este gravata pe fiecare disc. Orice toleranta speciala pentru paralelism, planeitate si alezaj poate fi facut conform cerintelor clientului. Distantierele captusite cu poliuretan sunt utilizate in prelucrarea tablelor de otel cu grosimi cuprinse intre 0.4 mm si 4 mm si au un rol important inclusiv in reducerea zgomotului generat in timpul procesului de productie. Ajuta aplicatiile de taiere in diverse sarcini cum ar fi: transportul, ridicarea, protejarea suprafetei materialului si sprijinirea acestuia, apasand foaia metalica pentru prevenirea bombarii in timpul taierii. In producerea lor, piesele se diferentiaza pe sistemul tata-mama pe baza unui cod de culori.

Caracteristici

Rezistenta maxima la uzura
Stabilitate dimensionala
Duritate adecvata
Demagnetizate

Polyurethane bonded stripper rings are made of a heat treated alloyed steel ring, to which a polyurethane layer is added. It can be PUR 75-80 shore A polyurethane or PUR blue 85-90 shore A polyurethane. PUR Pureuretan is resistent to oil action but also to temperatures up to 120 ° C. The PUR polyurethane layer has excellent mechanical, physical and amortization properties. Polyurethane shows abrasion resistance, low thermal conductivity and high resistance. The spacers are made with the same tolerances of flatness and parallelism as the rotary slitter knives. This type of products is thought to work on the highest standards of accuracy but also to be easy to replace. The thickness of the polyurethane bonded stripper rings is engraved on each disc. Any special tolerance for parallelism, flatness and boring can be done according to customer requirements. Polyurethane bonded stripper rings are used in the processing of steel sheets ranging in thickness from 0.4 mm to 4 mm and play an important role in reducing the noise generated during the production process. They help cutting applications in various tasks such as transporting, lifting, protecting the surface of the material and supporting it, by pressing the metal sheet to prevent the swelling during cutting procedure. In their production, the parts are differentiated on the male-female system based on a color code.

Characteristics

Maximum wear resistance
Dimensional stability
Appropriate hardness
Demagnetized

Distantiere circulare captusite cu poliuretan
Polyurethane bonded stripper rings

Distantiere captusite cu spuma poliuretanica *Polyurethane bonded stripper rings*	Temperatura de utilizare *Usage temperature*	Duritate inel metalic *Metal ring hardness* (mm)	Grosime inel metalic *Metal ring thickness* (mm)	Diametru exterior inel metalic *Metal ring exterior diameter* (mm)	Diametru exterior PUR *PUR exterior diameter* (mm)	Diamentru interior inel metalic *Metal ring interior diameter* (mm)
Min	0 °C	56 HRC	10	70	100	40
Max	100 °C	57 HRC	24	290	350	220

Informatii generale despre tolerante / *General information about tolerances*

Toleranta generala la diametru in realizarea cutitelor rotative, distantierelor din otel si a distantierelor captusite cu poliuretan este de 0 / -0.02mm. Tolerantele generale ale cutitelor rotative, distantierelor din otel si a distantierelor captusite cu poliuretan sunt G6, G7, H7, F7 si F8. Orice toleranta speciala pentru paralelism, planeitate si alezaj poate fi facuta conform cerintelor clientului.

The overall diameter tolerance in the fabrication of rotary slitter knives, steel spacers and polyurethane bonded stripper rings is 0 / -0.02mm. The general tolerances for rotary slitter knives, steel spacers and polyurethane bonded stripper rings are G6, G7, H7, F7 and F8. Any special tolerance for parallelism, flatness and bore can be made according to customer requirements.

Grafic tolerante la executia cutitelor si distantierelor de otel
Tolerances graph for the execution of metal knives and spacers

Diametru ext. *Ext. Diameter*	Grad de precizie / *Precision grade*			
	Grosime / *Thickness*	Planeitate / *Flatness*		
(mm)	Toleranta/ *Tolerance*	3<T<5	5<T<10	T<10
<250	±0.003	0.04	0.015	0.005
250<D<350	±0.004	0.05	0.03	0.006

Discuri separatoare
Separating discs

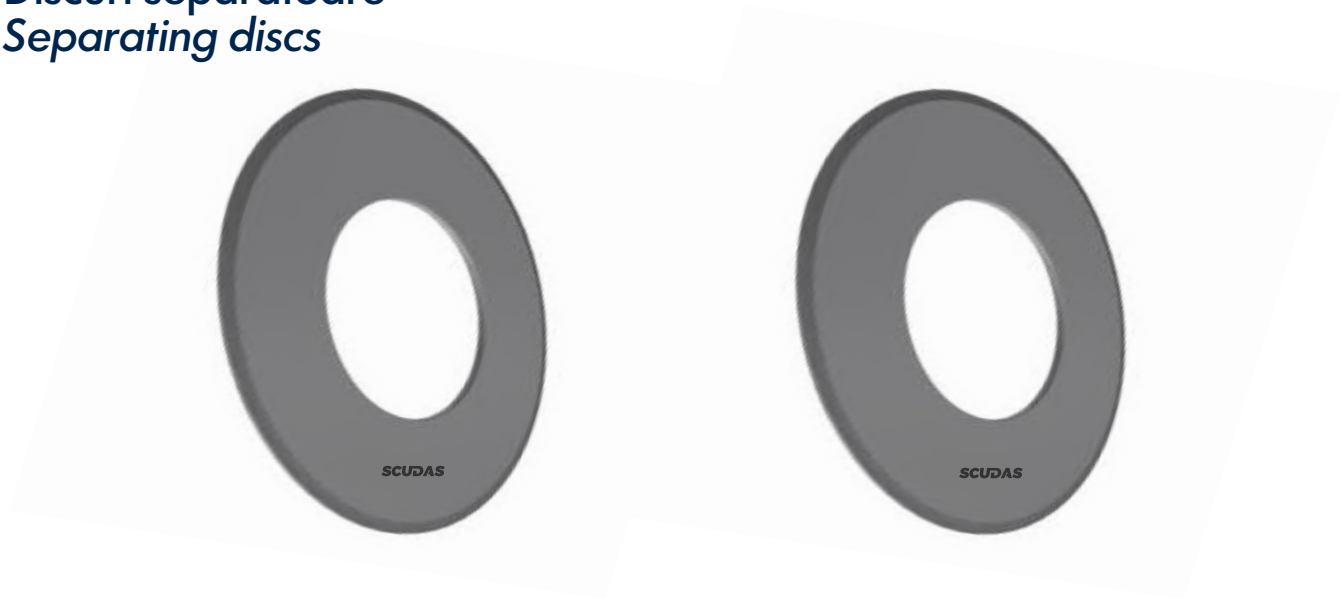

Discurile separatoare sunt realizate din otel aliat de scule, fiind supuse unui tratament termic. Disponibile intr-o gama larga de grosimi si diametre, discurile separatoare au o rezistenta maxima la socuri si impact. Otelul aliat de scule folosit pentru fabricarea discurilor separatoare este special adaptatat pentru a asigura o durata de functionare mai lunga. Grosimea discurilor separatoare este gravata pe fiecare disc. Discurile separatoare se folosesc in procesele de separare a fasiilor metalice, de ghidare si de rebobinare a lor. Orice toleranta speciala pentru paralelism, planeitate si alezaj poate fi facut conform cerintelor clientului.

Caracteristici

Rezistenta maxima la uzura
Stabilitate dimensionala
Duritate adecvata
Rezistenta maxima la solicitari laterale
Demagnetizate

The separating discs are made of alloyed tool steel and are subjected to heat treatment. Available in a wide range of thicknesses and diameters, separating discs have maximum shock and impact resistance. The alloyed tool steel used for the manufacture of separating discs is especially suited to ensure a longer service life. The thickness of the separating discs is engraved on each disc. The separating discs are used in the separation, metal guiding and winding processes. Any special tolerance for parallelism, flatness and boring can be done according to customer requirements.

Characteristics

Maximum wear resistance
Dimensional stability
Appropriate hardness
Maximum resistance to side presures
Demagnetized

Discuri separatoare *Separating discs*	Duritate *Hardness*	Grosime *Thickness* (mm)	Diametru exterior *Exterior diameter* (mm)	Diamentru interior *Interior diameter* (mm)
Min	55 HRC	3	100	40
Max	56 HRC	10	200	80

Cutite circulare speciale
Special rotary slitting knives

Sub marca Scudas sunt produse si o serie de cutite rotative speciale, designul acestora fiind prevazut cu o serie de gauri de fixare pentru suportii pe care se aplica. Pot fi realizate din acelasi tip de otel aliat de scule ca si cutitele circulare. Pentru acest tip de cutite, special adaptate pentru o durata de functionare mai lunga, avem disponibile facilitati de rectificare a planeitatii precum si a diametrelor interioare si exterioare.

Caracteristici

Rezistenta maxima la uzura
Stabilitate dimensionala
Duritate adecvata
Rezistenta maxima la ciobire
Demagnetizate

Under the Scudas brand are also produced some special rotary slitter knives, their design being provided with a number of mounting holes for the supports on which they can be applied. They can be made of the same type of alloyed tool steel as the rotary slitter knives. For this type of knifes, specially adapted for a longer service life, flatness rectifying facilities and also interior and exterior diameters rectifying facilities are available.

Characteristics

Maximum wear resistance
Dimensional stability
Appropriate hardness
Maximum chipping resistance
Demagnetized

Cutite rotative speciale *Special rotary slitter knives*	Duritate *Hardness* (mm)	Grosime *Thickness* (mm)	Diametru exterior *Exterior diameter* (mm)	Diamentru interior *Interior diameter* (mm)
Min	59 HRC	10	100	60
Max	61 HRC	20	250	180

Model schema fasiere
Slitting scheme pattern

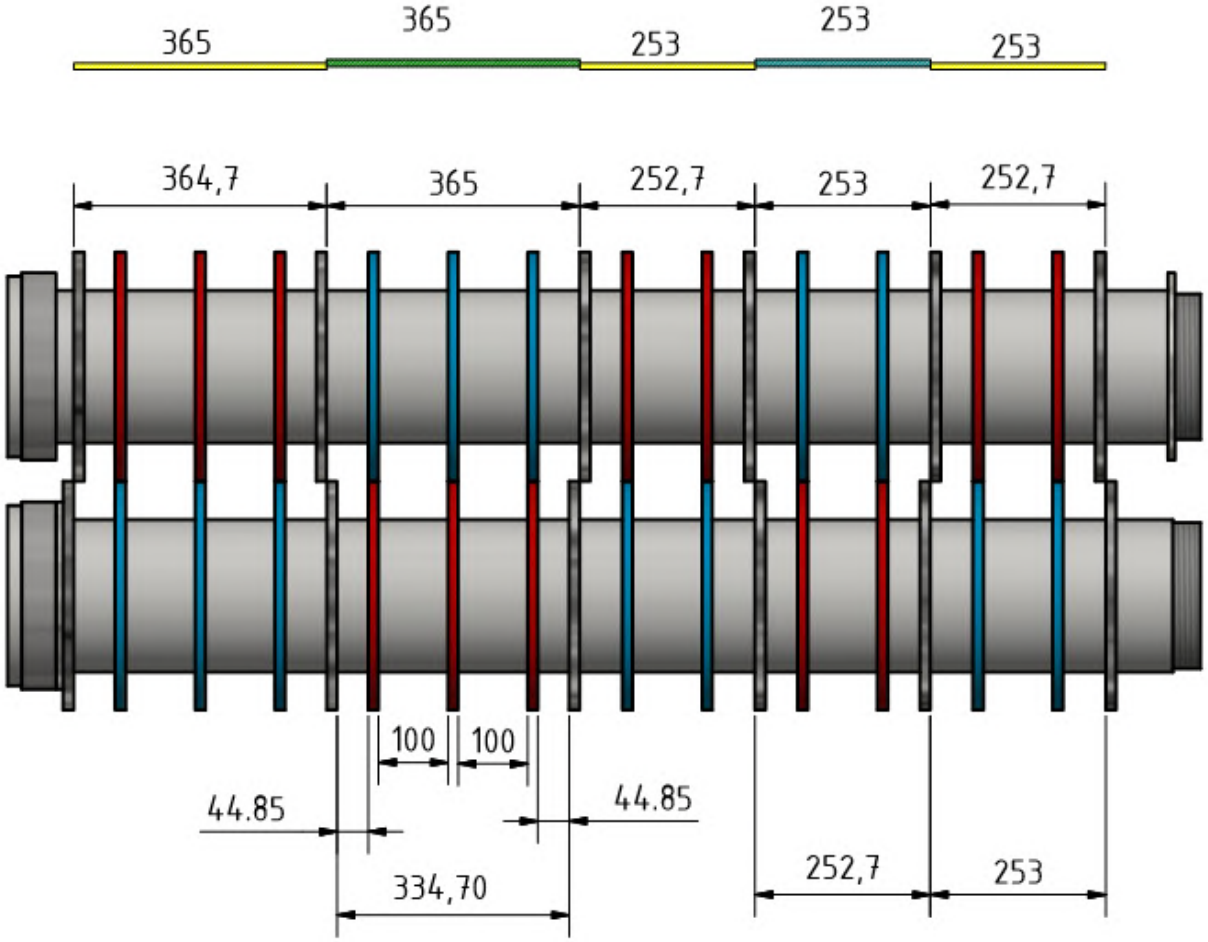

Exemplu

Pentru a mentine un spatiu de 334.7 mm intre 2 cutite se vor folosi distantierele potrivit tabelului.

Grosime distantier/ *Spacer thickness* (mm)		
3.00	7.00	11.00
4.00	8.00	12.00
5.00	9.00	13.00
5.05	10.05	14.00
5.10	10.10	15.00
5.15	10.15	20.00
5.20	10.20	30.00
5.30	10.30	40.00
5.40	10.40	50.00
6.00	10.50	100.00

Example

To maintain a space of 334.7 mm between 2 knives, use the spacers according to the table.

Table / *Metal sheet*		
Grosime distantier *Spacer Thickness* (mm)	Cantitate *Quantity*	Total grosime *Total thickness* (mm)
100	2	200
15	3	45
14	2	28
10.2	4	40.8
5.30	12	10.6
5.15	2	10.3
Total	15	334.7

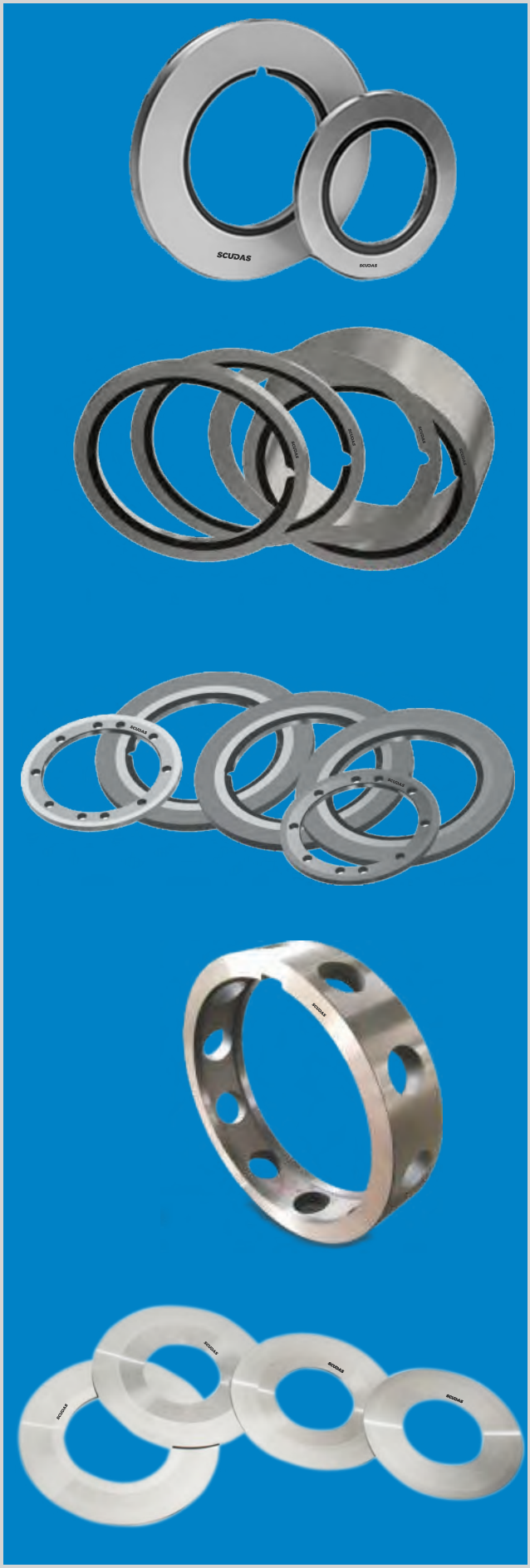
SCUDAS

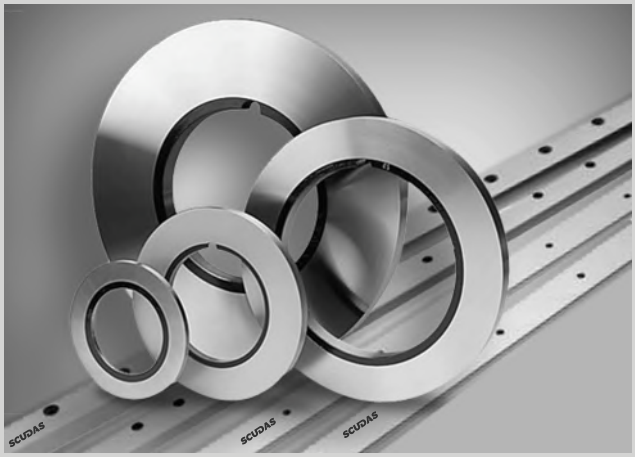
SCUDAS
SCUDAS
SCUDAS

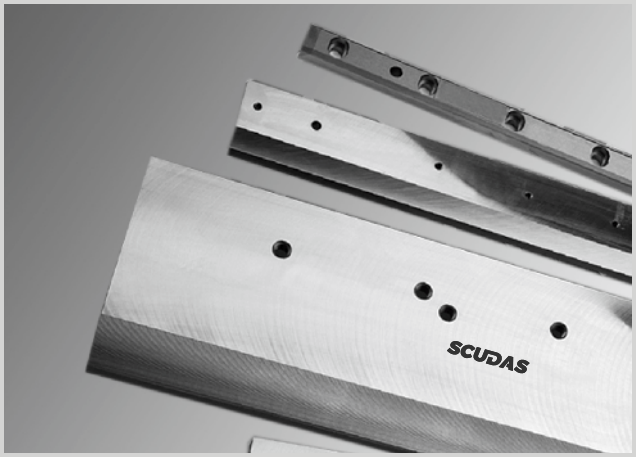
SCUDAS


SCUDAS
SCUDAS

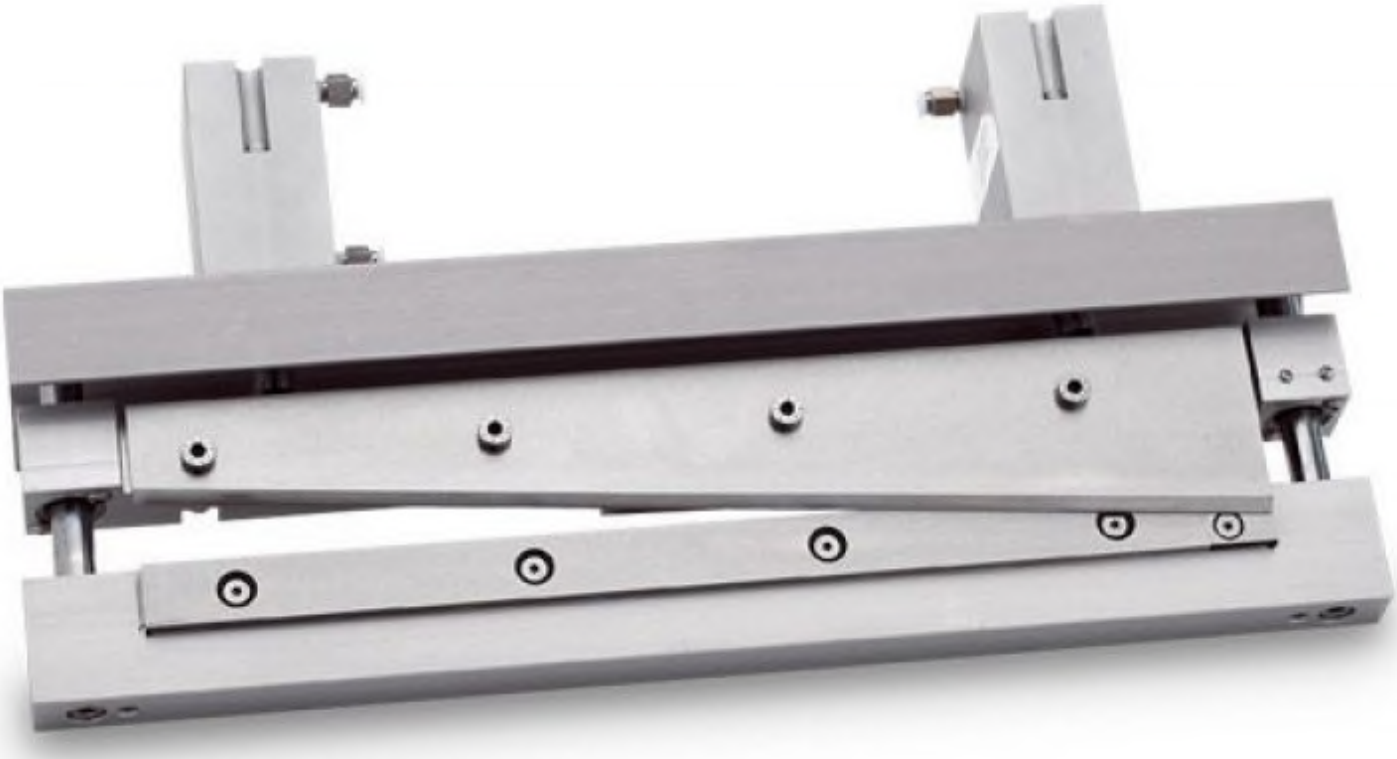

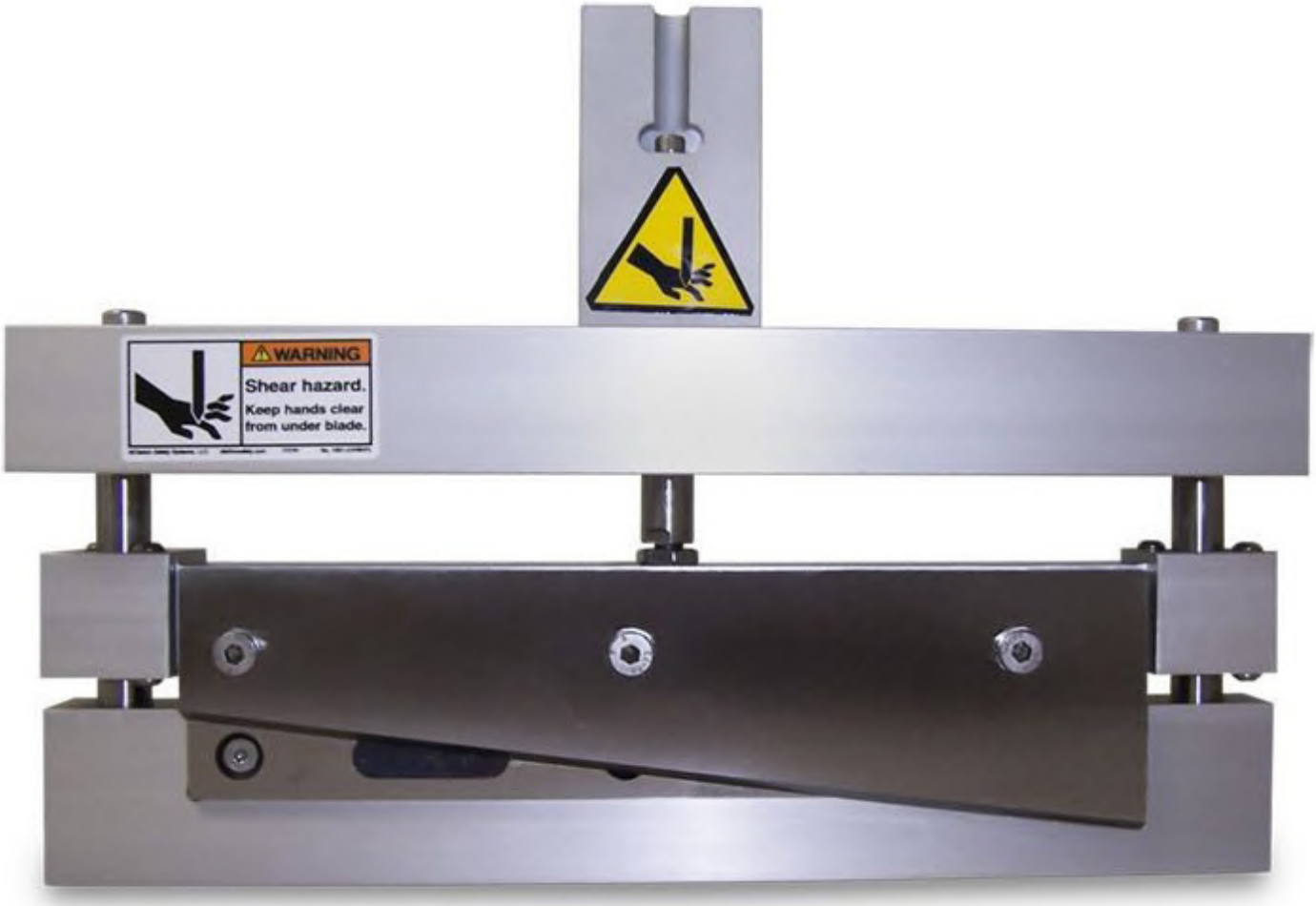
WARNING
Shear hazard.
Keep hands clear
from under blade.

Cutite pentru foarfece ghilotina
Guillotine shear blades

Divizia de Scule produce cutite pentru foarfeci ghilotina intr-o gama variata de marimi standard cat si pe baza desenului sau unei mostre furnizate de client. Folosirea materialelor de cea mai buna calitate este corelata cu tratamentele termice aplicate sculelor pentru atingerea parametrilor necesari. Realizate din otel aliat de scule si tratate termic, cutitele pentru foarfeci ghilotina sunt suficient de dure pentru a necesita cat mai putine ascutiri dar nu extrem de dure astfel incat sa reziste la uzura fara a se ciobi. Cutitele pentru foarfeci ghilotina pot fi produse cu 4, cu 2 sau cu o singura muchie de taiere.

Cutitele pentru ghilotina pentru debitat table din otel (Fig. 1) pot fi realizate dupa documentatia clientului sau pe modelele: FG 825, FG 1030, FG 10, FG 1300, FG 3-1250, FG 3-2000; FDT 25-30, FDT16; H 3222A, H 481A-11-426, NTH 3150-25; FP 14, FDB 3X3000, FDB 6X3000; ERFURT.
Din categoria cutitelor pentru ghilotine speciale putem produce cutite pentru tocator (Fig. 2) utilizate in industria lemnului sau dupa modelul sau specificatiile clientului.

Proinvest's Tooling Division produces guillotine shear blades in a wide range of standard sizes as well as on the basis of a drawing or a sample delivered by the customer. The use of the highest quality materials is correlated with the heat treatments applied to the tools in order to achieve the required parameters. Made of alloyed tool steel and heat treated, the guillotine shear blades are hard enough to require as little sharpening as possible but not as harsh as to withstand wear without chipping. Guillotine shear blades can be manufactured with 4, 2 or with one cutting edge.

The guillotine blades for cutting steel sheets (Fig.1) can be made according to the customer's model or in the following models: FG 825, FG 1030, FG 10, FG 1300, FG 3-1250, FG 3-2000; FDT 25-30, FDT16; ·H 3222A, H 481A-11-426, NTH 3150-25; FP 14, FDB 3X3000, FDB 6X3000; ERFURT.
From the special guillotine shear blades category we can produce knives for the wood industry (Fig.2), according to the customer's model or specifications.

Caracteristici

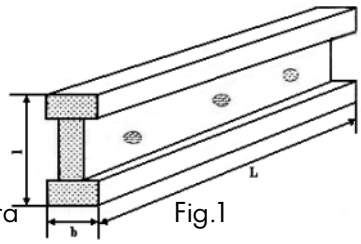

Fig.1

Rezistenta maxima la uzura
Duritate adecvata
Mentinerea celui mai inalt grad de acuratete a taierii
Rezistenta ridicata la socuri mecanice
Durata lunga de viata
Demagnetizate

Characteristics

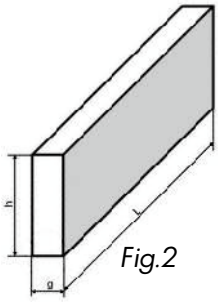

Fig.2

Maximum wear resistance
Appropriate hardness
Maintaining the highest degree of accuracy of cutting
High resistance to mechanical shocks
Long lifetime
Demagnetized

Cutite pentru foarfece ghilotina
Guillotine shear blades

Cutite pentru foarfeci ghilotina *Guillotine shear blades*	Duritate *Hardness*	Grosime *Thickness* (mm)	Toleranta grosime *Thickness tolerance* (mm)	Latime *Width* (mm)	Toleranta latime *Width tolerance* (mm)	Lungime *Lenght* (mm)	Toleranta lungime *Lenght tolerance* (mm)
Min	55 HRC	10	-0.05	50	-0.05	150	-0.5
Max	57 HRC	30	+0.05	100	+0.05	1000	+0.5

Dimensiuni pentru gama de cutite ghilotina
Measures for the shear blades

	B1	B2	B3	B4	B5	B6	B7	B8	B9	B10
	50	55	60	65	70	75	80	85	90	100
C1	50 x 10									
C2	50 x 11									
C3	50 x 12	55 x 12	60 x 12							
C4	50 x 13	55 x 13	60 x 13	65 x 13	70 x 13					
C5	50 x 14	55 x 14	60 x 14	65 x 14	70 x 14					
C6	50 x 15	55 x 15	60 x 15	65 x 15	70 x 15	75 x 15				
C7		55 x 16	60 x 16	65 x 16	70 x 16	75 x 16				
C8		55 x 17	60 x 17	65 x 17	70 x 17	75 x 17				
C9		55 x 18	60 x 18	65 x 18	70 x 18	75 x 18	80 x 18	85 x 18		
C10		55 x 19	60 x 19	65 x 19	70 x 19	75 x 19	80 x 19	85 x 19		
C11		55 x 20	60 x 20	65 x 20	70 x 20	75 x 20	80 x 20	85 x 20	90 x 20	100 x 20
C12						75 x 21	80 x 21	85 x 21	90 x 21	
C13						75 x 22	80 x 22	85 x 22	90 x 22	100 x 22
C14						75 x 23	80 x 23	85 x 23	90 x 23	
C15						75 x 24	80 x 24	85 x 24	90 x 24	
C16						75 x 25	80 x 25	85 x 25	90 x 25	100 x 25
C17										100 x 26
C18										100 x 27
C19										100 x 28
C20										100 x 29
C21										
C22										100 x 30

* Adnotari conforme tabelului Adnotari cutite Ghilotina / *Adnotations conforming to the table Guillotine knives adnotations*

Cutite pentru foarfece ghilotina
Guillotine shear blades

Schite modele / *Models sketches*

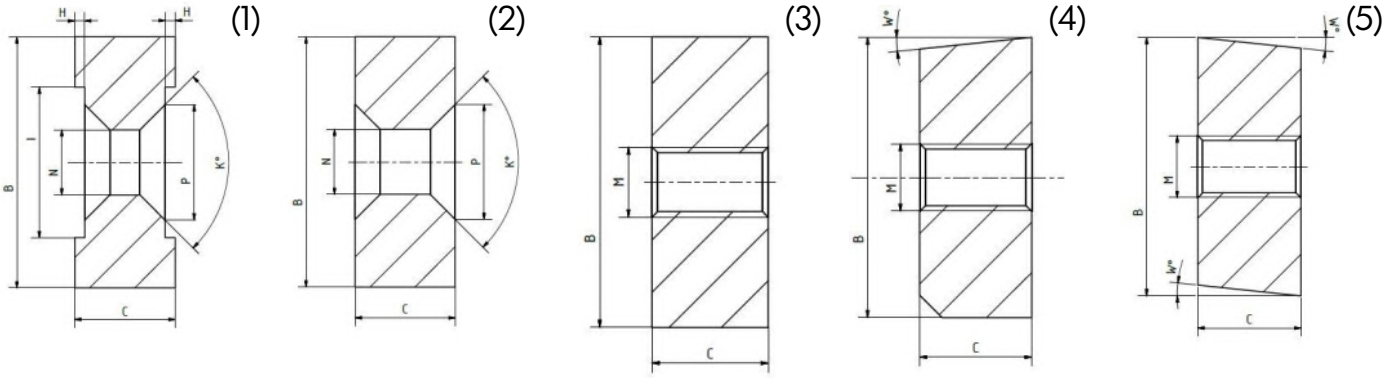

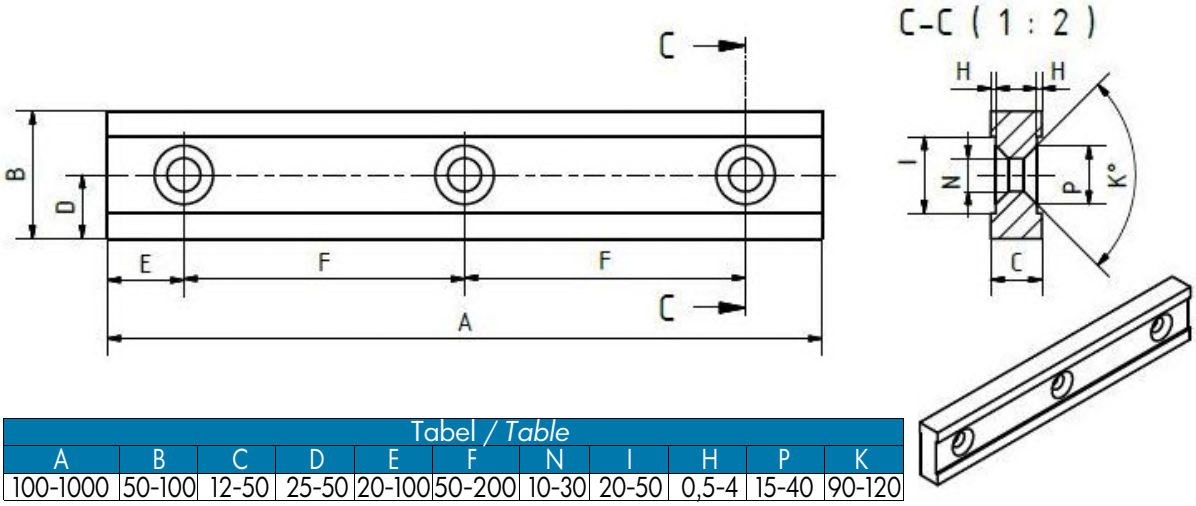

(1)

Tabel / *Table*										
A	B	C	D	E	F	N	I	H	P	K
100-1000	50-100	12-50	25-50	20-100	50-200	10-30	20-50	0,5-4	15-40	90-120

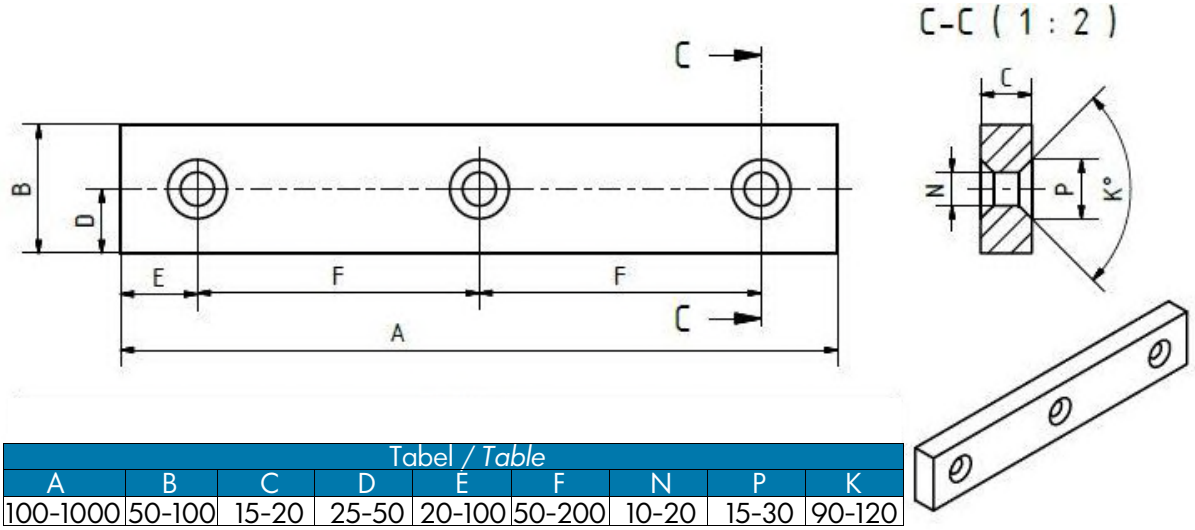

(2)

Tabel / *Table*								
A	B	C	D	E	F	N	P	K
100-1000	50-100	15-20	25-50	20-100	50-200	10-20	15-30	90-120

Cutite pentru foarfece ghilotina
Guillotine shear blades

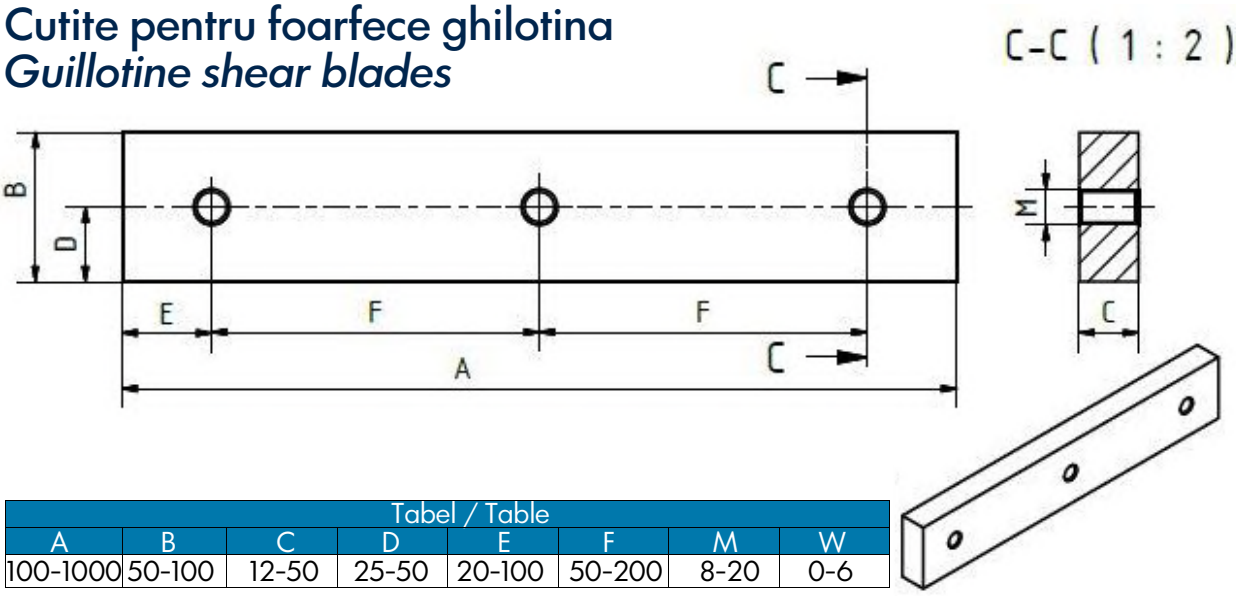

(3)

Tabel / Table							
A	B	C	D	E	F	M	W
100-1000	50-100	12-50	25-50	20-100	50-200	8-20	0-6

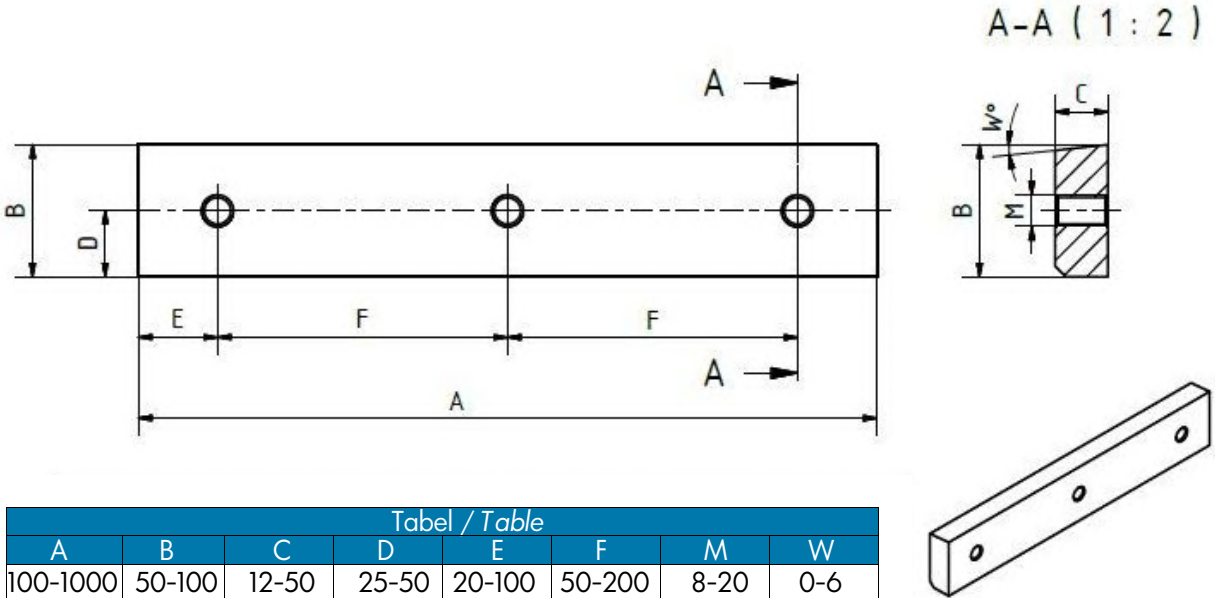

(4)

Tabel / *Table*							
A	B	C	D	E	F	M	W
100-1000	50-100	12-50	25-50	20-100	50-200	8-20	0-6

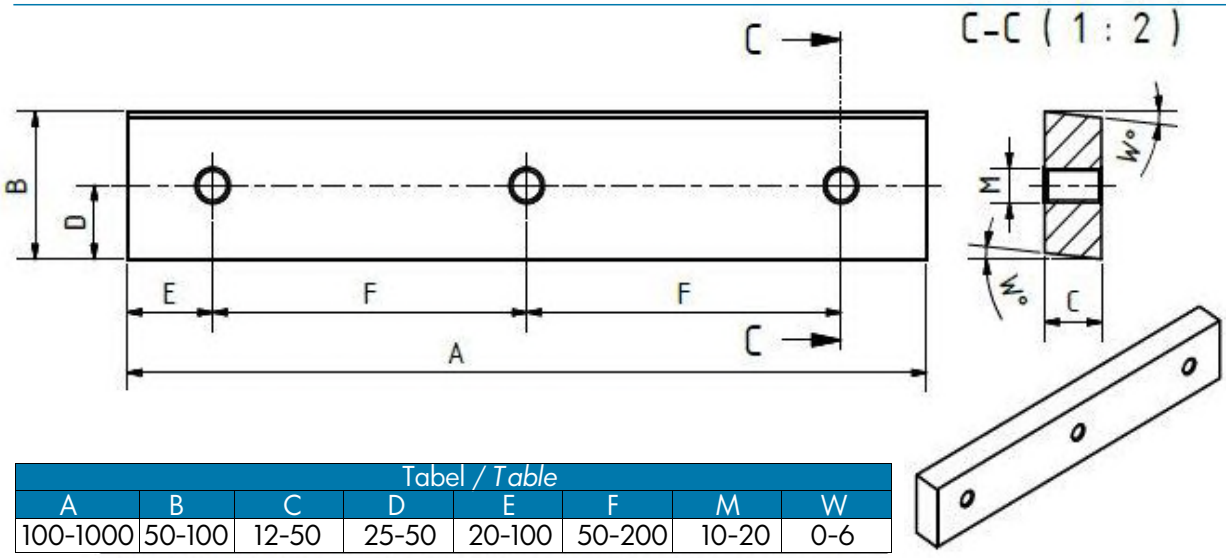

(5)

Tabel / *Table*							
A	B	C	D	E	F	M	W
100-1000	50-100	12-50	25-50	20-100	50-200	10-20	0-6

Cutite pentru foarfece ghilotina
Guillotine shear blades

Adnotari ale schitelor cutitelor pentru foarfeci ghilotina
Guillotine shear blades sketches adnotations

	Descriere cutit pentru foarfece ghillotina - *Shear blade description*
A	Lungime cutit - *Lenght of knife*
B	Latime cutit - *Width of knife*
C	Grosime cutit - *Thickness of knife*
D	Distanta de la centrul gaurii la partea inferioarea a cutitului *Distance from center of hole to back of knife*
E	Distanta de la capatul cutitului la centrul primei gauri - *Distance from end of knife to center of 1st hole*
F	Distanta dintre centrele gaurilor *Distance from center to center of hole*
G	Numar randuri de gauri - *Number of rows of holes*
H	Adancime canal - *Chanel depth*
I	Latime canal - *Chanel width*
K	Unghiul de tesire al gaurilor - Angle of holes countersink
N	Marimea gaurilor simpe - *Size of drilled holes*
M	Dimensiunea gaurilor filetate - Size of threaded holes
P	Diametrul tesirii gaurilor - *Diameter of holes countersink*
W	Gradul muchiei de taiere - *Degree of bevel*

Cutite de ghilotina pentru taierea profilelor
Guillotine sknives for profiles cutting

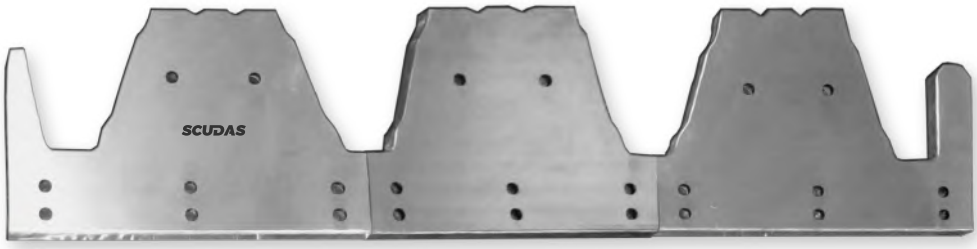

In oferta Diviziei de Scule se regasesc cutitele din ansamblul de taiere a tablei profilate si a celei amprentante. Putem realiza cutite superioare mobile, cutite inferioare de intrare si cutite inferioare de iesire din otel de scule SR EN ISO 4957, tratate termic pentru a garanta o duritate ridicata a muchiei de taiere. Materialul de cea mai buna calitate asigura o duritate adecvata iar tratamentele termice in baia de saruri sporesc performanta si durabilitatea lamelor. Dimensiunile la care se pot realiza aceste cutite pot fi stabilite fie pe baza unei schite fie pe baza unei mostre oferite de client.

Caracteristici

Rezistenta maxima la uzura
Stabilitate dimensionala
Duritate adecvata
Rezistenta maxima la ciobire

In our Tooling Division offer you cand find the knives of the tapezoidal sheet profiles and embossed corrugated sheet cutter assembly. We can make mobile upper knives, lower input knives and lower output knives from SR EN ISO 4957 alloyed tool steel, heat treated to guarantee high cutting edge hardness. The best quality material ensures adequate hardness and the heat treatments in the salt bath increase the performance and durability of the blades. The dimensions at which these knives can be made can be determined either on the basis of a sketch or on the basis of a sample provided by the customer.

Characteristics

Maximum wear resistance
Dimensional stability
Appropriate hardness
Maximum chipping resistance

Cutite de ghilotina pentru decuparea profilelor *Guillotine knives for profiles cutting*	Duritate *Hardness*	Grosime *Thickness* (mm)	Toleranta grosime *Thickness tolerance* (mm)	Latime *Width* (mm)	Toleranta latime *Width tolerance* (mm)	Lungime *Lenght* (mm)	Toleranta lungime Lenght tolerance (mm)
Min	59 HRC	20	- 0.1	50	- 0,1	150	- 0.5
Max	61 HRC	25	+0.1	300	+0,1	1000	+0.5


CE
DoFaK
"DOFAK" SP. J.

Cutite profilate pentru taieri diverse
Profiled guillotine knives for various cuts

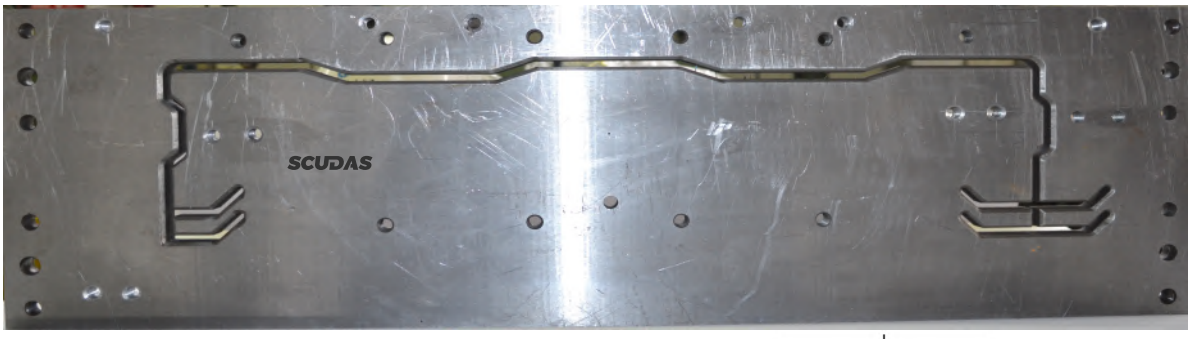

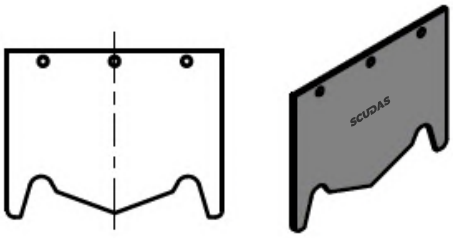

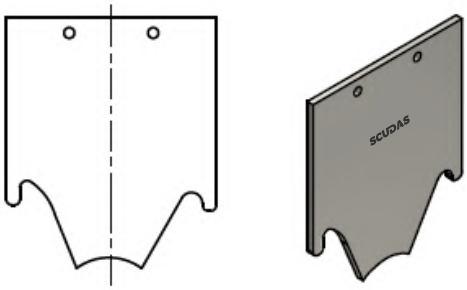

Gama de cutite profilate pentru taieri diverse are o paleta larga de oferte. Aceste cutite pot fi realizate din otel aliat pentru scule care lucreaza la rece sau din otel aliat rapid pentru scule, cele doua tipuri de otel avand duritati diferite. Folosirea de materiale de cea mai buna calitate asigura o durabilitate ridicata iar tratamentele termice in baia de saruri sporesc performanta si durabilitatea acestor lame. Aceste tipuri de cutite au aplicabilitate directa in industria alimentara, textila, metalurgica, a tabacului, a cauciucului sau a pielii. Cutitele ghilotina pentru hartie pe care le putem comercializa sunt realizate dintr-un material special, otel rapid HSS. Dimensiunile la care se pot realiza aceste cutite pot fi stabilite fie pe baza unei schite fie pe baza unei mostre oferite de client.

Caracteristici

Rezistenta maxima la uzura
Duritate adecvata
Mentinerea celui mai inalt grad de acuratete a taierii
Rezistenta ridicata la socuri mecanice
Durata lunga de viata

The range of profiled guillotine knives for various cuts has a wide range of offers. These knives can be made of alloyed steel for cold working tools or alloy fast steel for tools, the two types of steel having different hardnes. The use of top quality materials ensures high durability and heat treatments in the salt bath increase the performance and durability of these blades. These types of knives have direct applicability in the food, textile, metallurgical, tobacco, rubber or leather industries. Paper sher blades ines for paper that we can sell are made of a special material, HSS fast steel. The dimensions at which these knives can be made can be determined either on the basis of a sketch or on the basis of a sample provided by the customer.

Characteristics

Maximum wear resistance
Appropriate hardness
Maintaining the highest degree of accuracy of cutting
High resistance to mechanical shocks
Long lifetime

Cutite profilate pentru taieri diverse *Profiled guillotine knives for various cuts*	Duritate *Hardness*	Grosime *Thickness* (mm)	Toleranta grosime *Thickness tolerance* (mm)	Latime *Width* (mm)	Toleranta latme *Width tolerance* (mm)	Lungime *Lenght* (mm)	Tolerantalungime *Lenght tolerance* (mm)
Min	60 HRC	3	-0.05	50	- 0.05	50	-0.3
Max	62 HRC	25	+0.05	300	+0.05	400	+0.3

Cutite pentru deformare - poansoane abkant
Deformation knives - abkant punches

Divizia de Scule a companiei poate realiza si scule pentru prese de indoit tabla tip abkant. Din aceasta categorie fac parte cutitele (poansoane de indoire) si prismele. Cutitele pentru abkant au ca material otelul aliat 42CrMo4 si sunt tratate termic pentru obtinerea unei duritati adecvate. La finalul procesului de productie produsele sunt brunate (acoperite cu un strat anticoroziv de culoare inchisa), aceasta procedura garantand o mai lunga durata de viata. Calitatea materialului utilizat garanteaza si o durabilitate ridicata. Cutitele abkant pot fi executate intr-o gama larga de forme si dimensiuni dupa desenul sau mostra de la client.

Caracteristici

Rezistenta maxima la uzura
Stabilitate dimensionala
Duritate adecvata

The Proinvest Group's Tooling Division can also produce Abkant punches. They ar made of 42MoCr4 alloyed steel and are heat treated to obtain an appropriate hardness. At the end of the production process, the products are brown, being are coated with a dark anticorrosive coating, this procedure guaranteeing a longer life. The quality of the material guarantees high durability. Abkant punches can be made in a wide range of shapes and sizes, either after the drawing or on the basis of a sample from the customer.

Characteristics

Maximum wear resistance
Dimensional stability
Appropriate hardness

Poansoane Abkant *Abkant punches*	Duritate *Hardness*	Grosime *Thickness* (mm)	Toleranta grosime *Thickness tolerance* (mm)	Inaltime *Height* (mm)	Lungime *Lenght* (mm)
Min	40 HRC	26	- 0.1	97	100
Max	45 HRC	36	+0.1	135	835

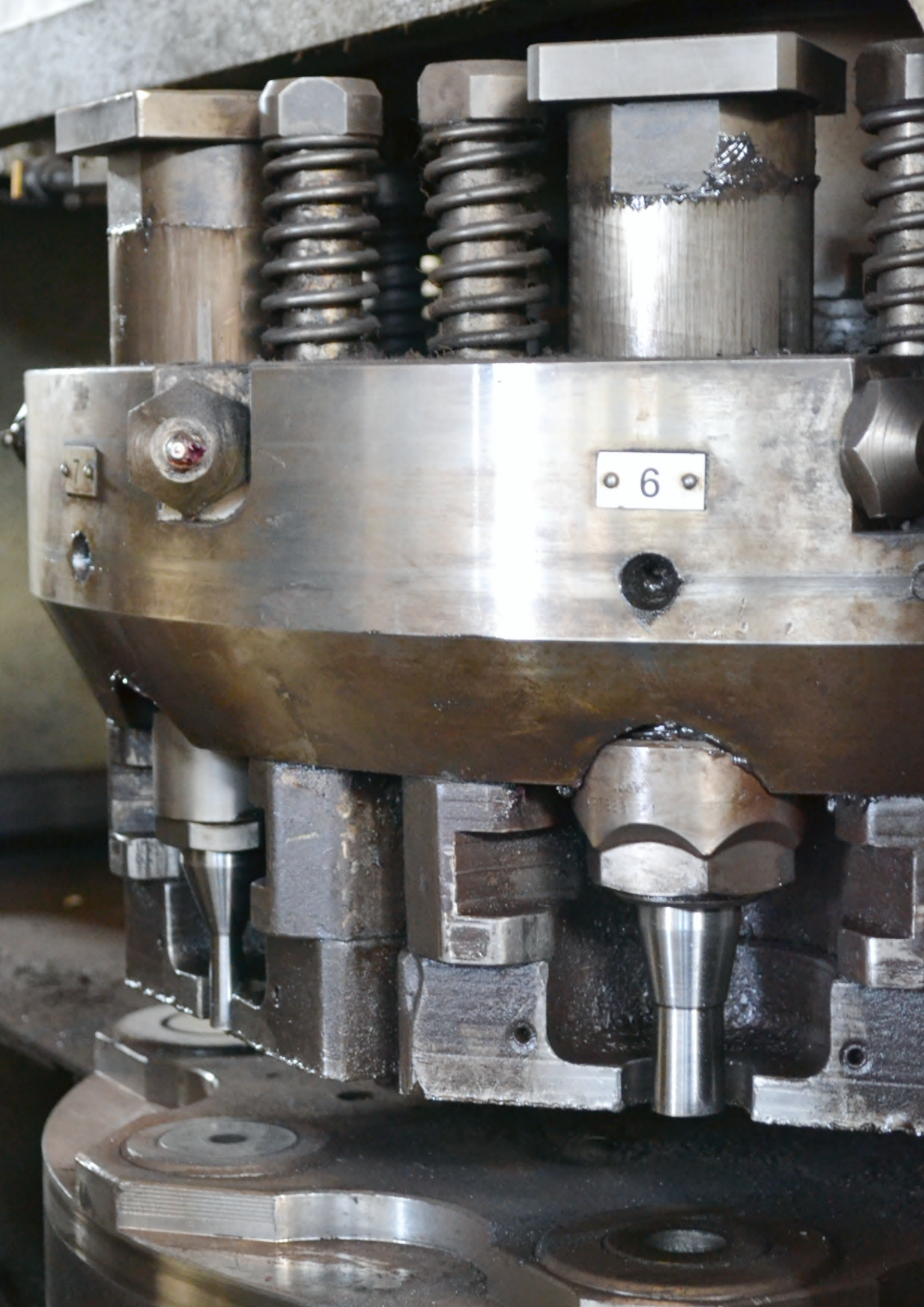
6

Poansoane si matrite
Punches and dies

Poansoane si matrite pentru table groase
Punches and dies for thick metal sheets

Poansoane si matrite pentru table subtiri
Punches and dies for thin metal sheets

In gama de produse a Diviziei de Scule a Proinvest Group puteti regasi o larga oferta de poansoane si matrite. Putem produce poansoane si matrite pentru unele din cele mai utiliziate tipuri de utilaje de pe piata, cum ar fi Geka, Ficep, Behrens or Finn-Power. Oferta Scudas nu se limiteaza la aceste produse standardizate, capabilitatile noastre tehnice permitandu-ne sa onoram si comenzi speciale. Putem produce piulite de fixare a poansoanelor precum si bucse de ghidare pentru acestea. Putem realiza orice tip de poansoane si matrite, pe baza unui model sau a unei schite oferite de client. Oferta de poansoane si matrite vizeaza atat utilajele de perforare a tablelor groase (3 mm – 20 mm) cat si a tablelor subtiri (< 3 mm). Poansoanele si matritele pot fi utilizate pentru mai multe tipuri de perforari, rotunde, ovale sau rectangulare. Tolerantele la diamentrele gaurilor variaza in functie de grosimea tablei perforate.

In the product range of the Proinvest Group's Tooling Division you can find a wide range of punches and and dies. We can produce punches and molds for some of the most used types of machines on the market, such as Geka, Ficep, Behrens or Fin Power. Scudas' offer is not limited to these standardized products, our technical capabilities allowing us to honor special orders. We can produce coupling nuts as well as guide bushings for these. Also, we can make any type of punches and dies based on a model or sketch offered by the customer. The offer for punches and dies is aimed at both the thick metall sheets (3 mm – 20 mm) and thin metall sheets (< 3 mm) drilling machines. Punches and moldss can be used for many types of round, oval or rectangular perforations. The tolerances of the holes diameters varies depending on the thickness of the perforated sheet.

Poansoane si matrite pentru table groase - pentru masini Geka
Thick metal sheets punches and dies - for Geka machines

Informatii generale / *General information*

Model Nr.	Amprenta *Stempel*	Matrita *Die*
BENDICROP	8-31	5
PUMA 55-80 IW 55-80	8-31 8-40	8 8
PUMA 100	8-31	8
PUMA 110 PUMA 150-200	8-31 10-40	10 10

Putem produce poansoane si matrite cu dimensiuni speciale, piulite de fixare (Fig.1) sau bucse de ghidare (Fig.2), realizarea acestoara bazandu-se pe schita sau desenul furnizat de client.

We can produces punches and dieswith special dimensions, coupling nuts (Fig.1) or punch guide bushings (Fig.2), their execution being based on a sketch or drawing provided by the costumer.

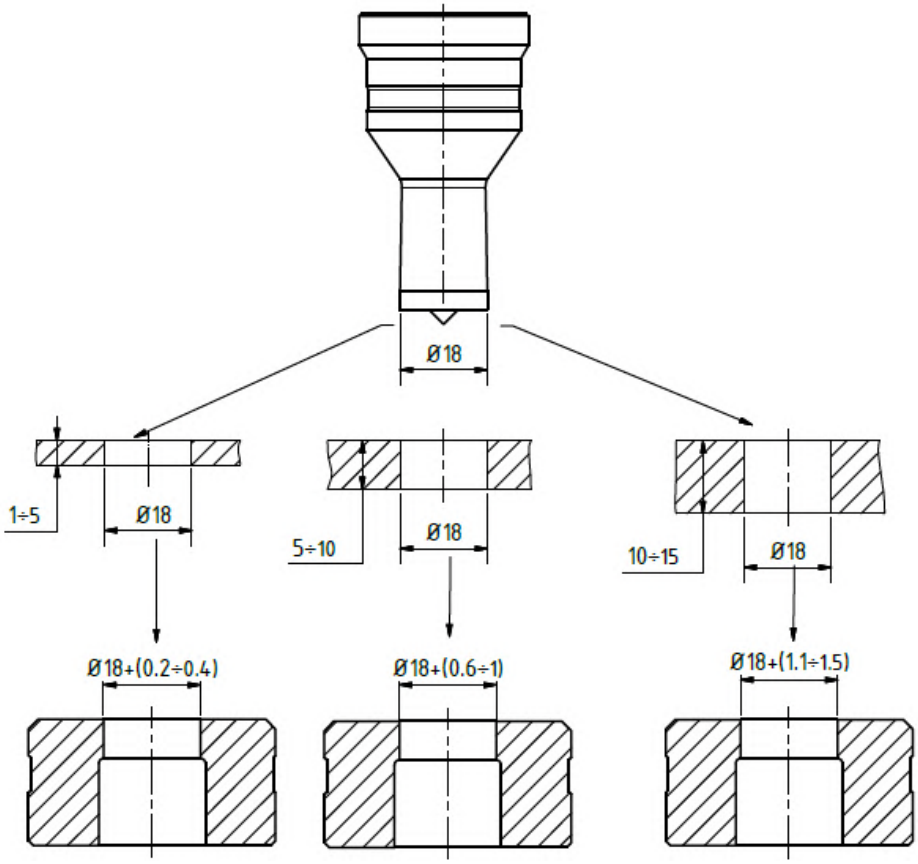

Fig.1

Fig.2

Poansoane si matrite pentru table groase - pentru masini Geka
Thick metal sheets punches and dies - for Geka machines

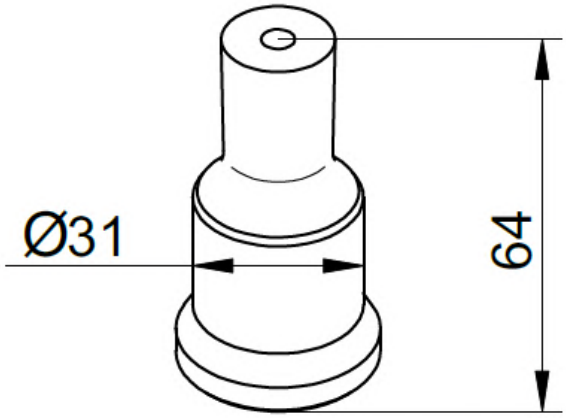

Poansoane rotunde ø (mm)
Round punches ø (mm)
5,0 ÷ 31,0

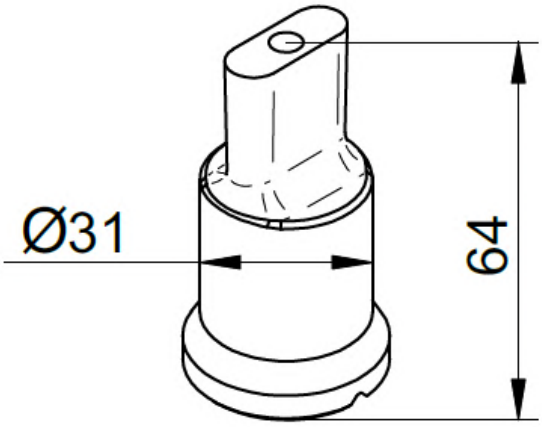

Poansoane ovale (mm)
Oval punches (mm)
6.0x10.0 ÷ 22,0x31,0

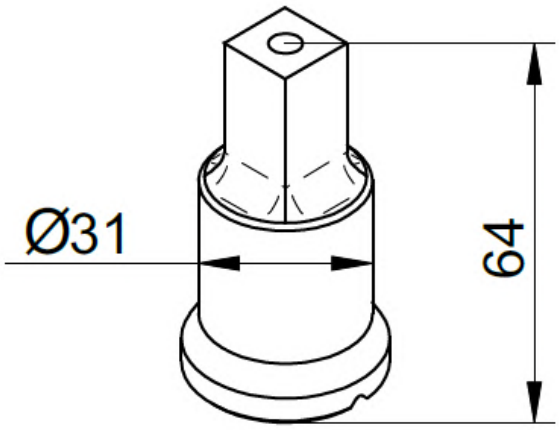

Poansoane patrate (mm)
Square punches (mm)
5,0 ÷ 22,0

Poansoane si matrite pentru table groase - pentru masini Geka
Thick metal sheets punches and dies - for Geka machines

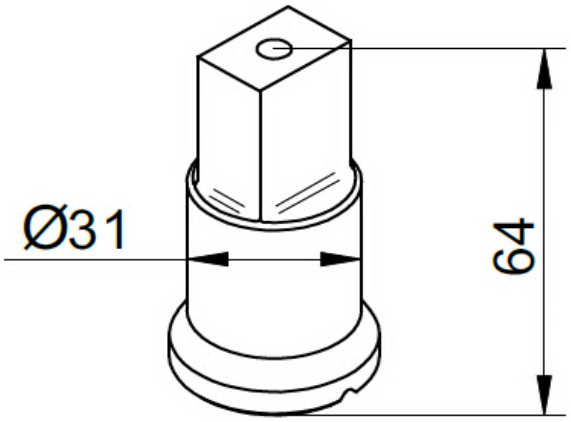

Poansoane dreptunghiulare (mm)
Rectangular punches (mm)
8x10 ÷ 8x28
9x10 ÷ 9x28
15x16 ÷ 15x24
10x11 ÷ 10x25
11x12 ÷ 11x25
12x13 ÷ 12x25
13x14 ÷ 13x25
14x15 ÷ 14x25

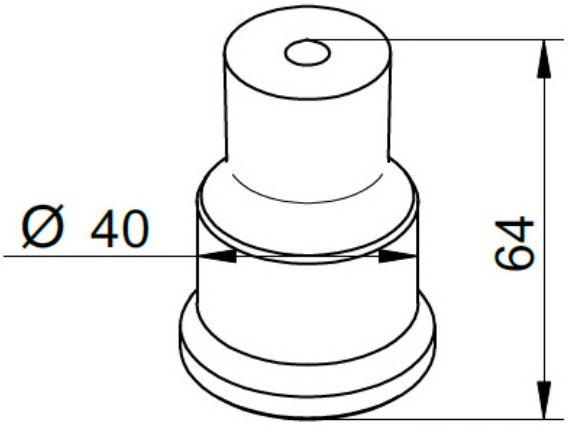

Poansoane rotunde ø (mm)
Round punches ø (mm)
10,0 ÷ 32,0

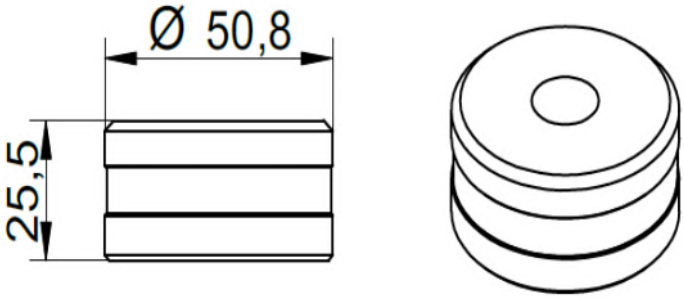

Matrite rotunde ø (mm)
Round dies ø (mm)
5,2 ÷ 33,2

Poansoane si matrite pentru table groase - pentru masini Geka
Thick metal sheets punches and dies - for Geka machines

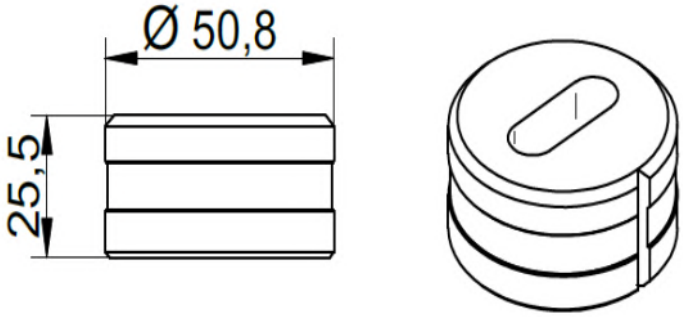

Matrite ovale (mm)
Oval dies (mm)
2x10,2 ÷ 22,7x31,7

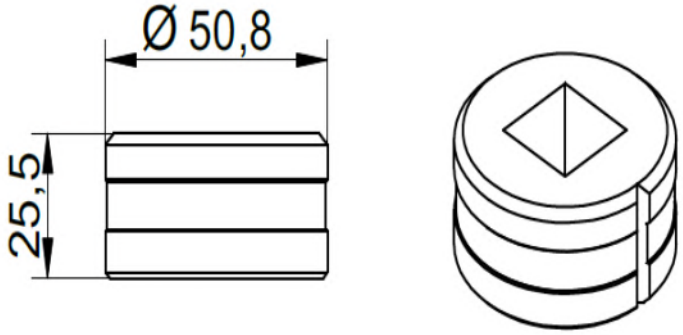

Matrite patrate (mm)
Square dies (mm)
5,2 ÷ 22,7

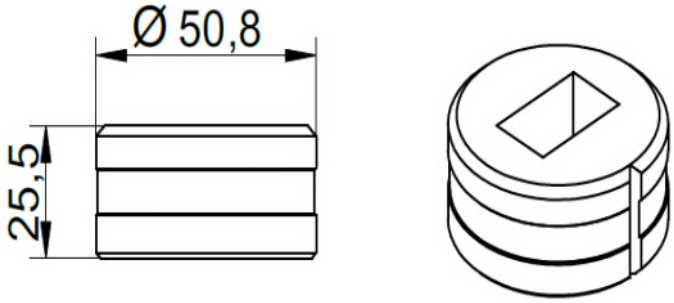

Matrite dreptunghiulare (mm)
Rectangular dies (mm)
8,2x10,2 ÷ 20,2x30,2
7x10,7 ÷ 20,7x30,7

Poansoane si matrite pentru table groase - pentru masini Ficep
Thick metal sheets punches and dies - for Ficep machines

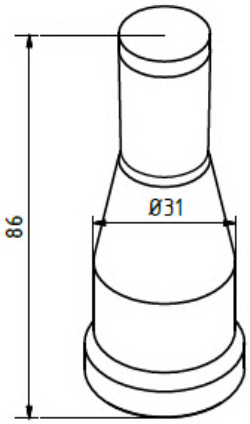

Poansoane rotunde ø (mm)
Round punches ø (mm)
10,0 ÷ 31,0

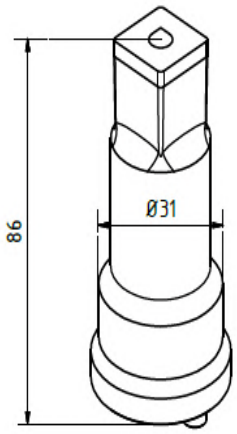

Poansoane patrate (mm)
Square punches (mm)
10,0 ÷ 22,0

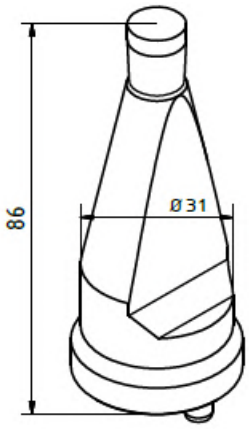

Poansoane rotunde ø (mm)
Round punches ø (mm)
10,0 ÷ 31,0

Poansoane si matrite pentru table groase - pentru masini Ficep
Thick metal sheets punches and dies - for Ficep machines

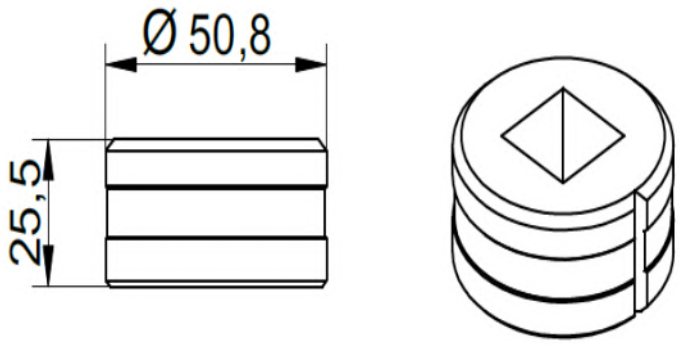

Matrite patrate (mm)
Square dies (mm)
10,2 ÷ 22,7

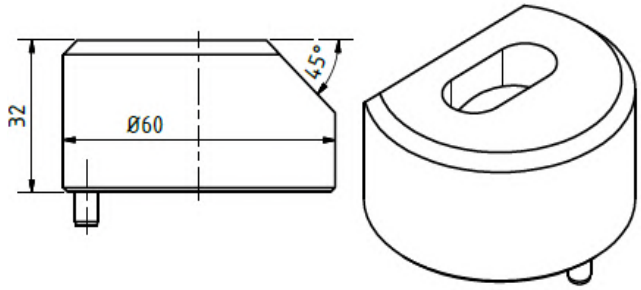

Matrite ovale (mm)
Oval dies (mm)
10,2x20,2 ÷ 22,7x31,7

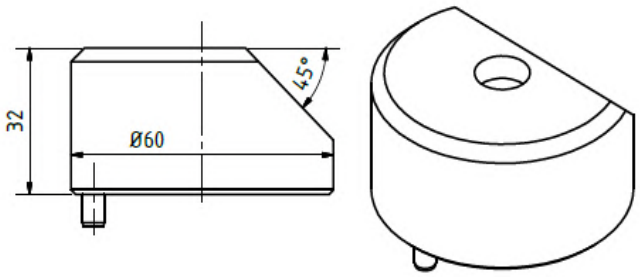

Matrite rotunde ø (mm)
Round dies ø (mm)
5,2 ÷ 33,2

Poansoane si matrite pentru table subtiri - pentru masini Behrens
Thin metal sheets punches and dies - for Behrens machines

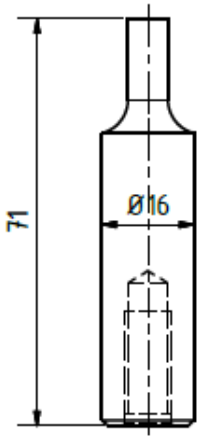

Poansoane rotunde ø (mm)
Round punches ø (mm)
4,0 ÷ 15,0

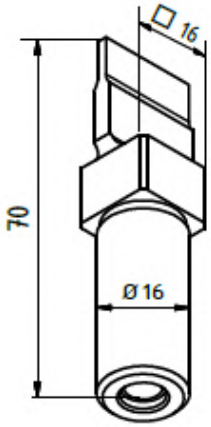

Poansoane dreptunghiulare (mm)
Rectangular punches (mm)
10,0x10,0
20,0x3,0 ÷ 22,0x3

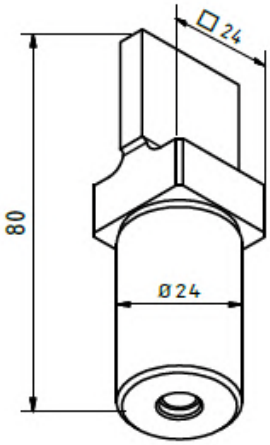

Poansoane dreptunghiulare (mm)
Rectangular punches (mm)
20,0x4,0 ÷ 26,0x6
23,0x7,0 ÷ 25,0x5

Poansoane si matrite pentru table subtiri - pentru masini Behrens
Thin metal sheets punches and dies - for Behrens machines

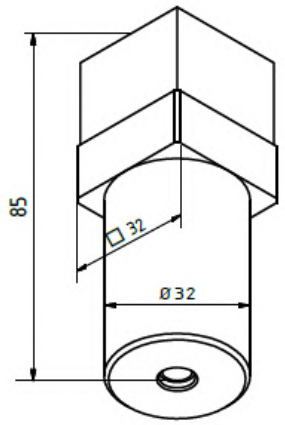

Poansoane patrate (mm)
Square punches (mm)
20,0 ÷ 30,0

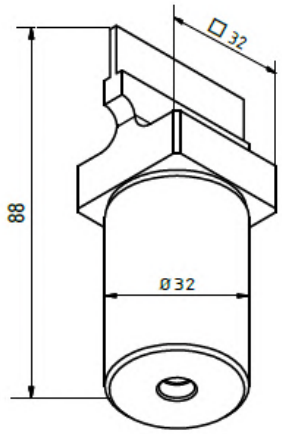

Poansoane dreptunghiulare (mm)
Rectangular punches (mm)
40,0x3 ÷ 40,0x6,0
39,0x5 ÷ 39,0x7,0

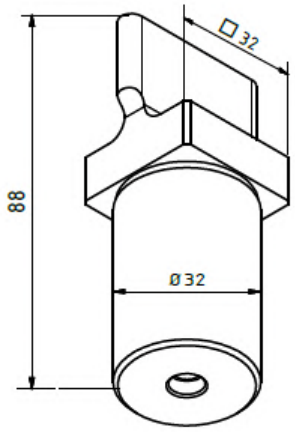

Poansoane ovale (mm)
Oval punches (mm)
32,0x6,0 ÷ 40,0x6,0

Poansoane si matrite pentru table subtiri - pentru masini Behrens
Thin metal sheets punches and dies - for Behrens machines

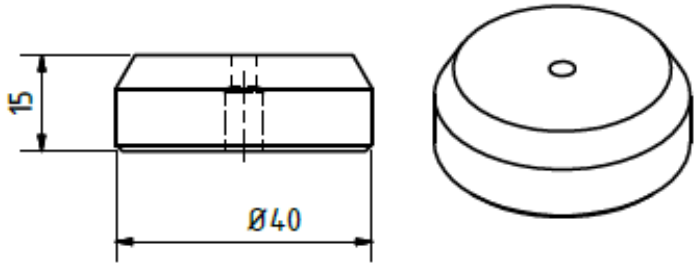

Matrite rotunde ø (mm)
Round dies ø (mm)
4,2 ÷ 15,3

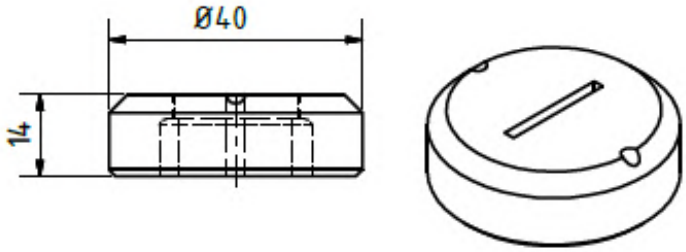

Matrite dreptunghiulare (mm)
Rectangular dies (mm)
10,2x10,2 ÷14,2x14,2
20,2x3,2 ÷ 22,2x3,2

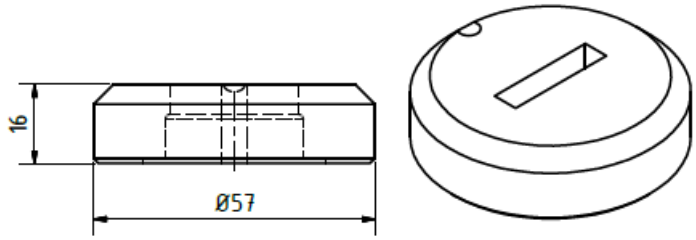

Matrite dreptunghiulare (mm)
Rectangular dies (mm)
24,2x4,2 ÷25,2x5,2
24,2x6,2 ÷ 26,2x6,2

Poansoane si matrite pentru table subtiri - pentru masini Behrens
Thin metal sheets punches and dies - for Behrens machines

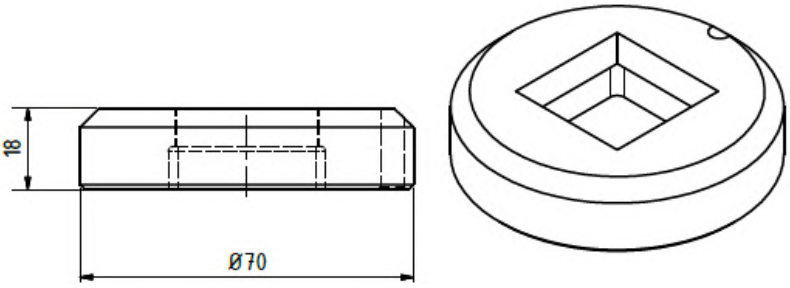

Matrite patrate (mm)
Square dies (mm)
20,2 ÷30,7

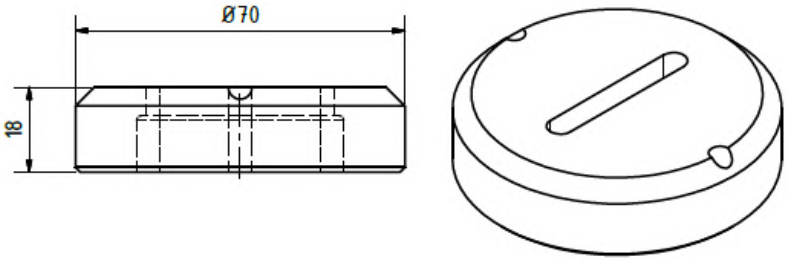

Matrite ovale (mm)
Oval dies (mm)
40,2x3,2÷40,2x6,2
39,2x5,2÷40,2x7,2

Poansoane si matrite pentru table subtiri - pentru masini Finn Power
Thin metal sheets punches and dies - for Finn Power machines

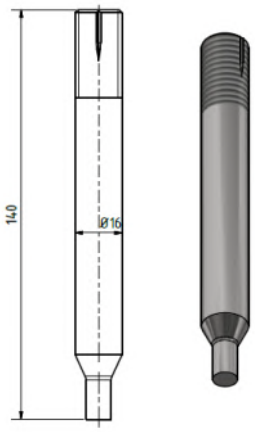

Poansoane rotunde ø (mm)
Round punches ø (mm)
4,0 ÷ 15,0

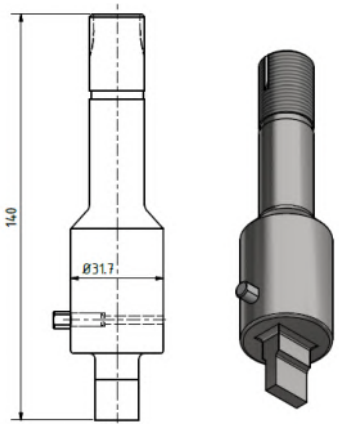

Poansoane dreptunghiulare (mm)
Rectangular punches (mm)
15,0x5,0 ÷ 20,0x6,0
23,0x7,0 ÷ 30,0x5,0

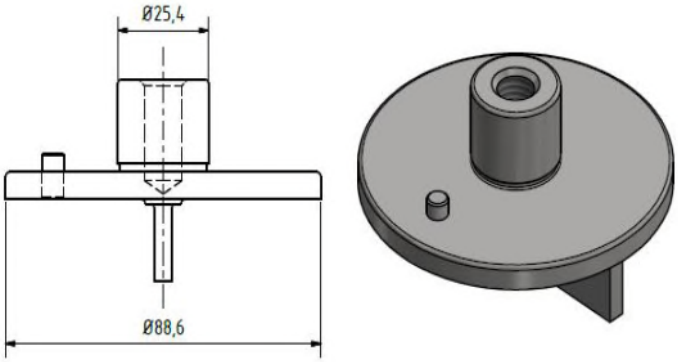

Poansoane dreptunghiulare (mm)
Rectangular punches (mm)
80,0x5,0

Poansoane si matrite pentru table subtiri - pentru masini Finn Power
Thin metal sheets punches and dies - for Finn Power machines

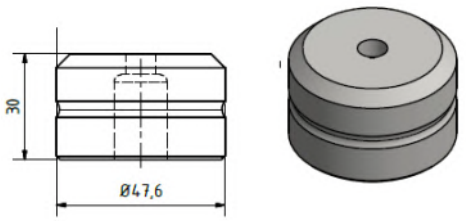

Matrite rotunde ø (mm)
Round dies ø (mm)
4,2 ÷ 15,3

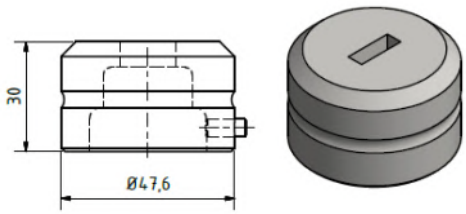

Matrite dreptunghiulare (mm)
Rectangular dies (mm)
15,2x5,2 ÷ 20,2x6,2
23,2x7,2 ÷ 30,2x5,2

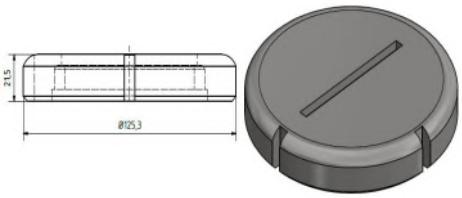

Matrite dreptunghiulare (mm)
Rectangular dies (mm)
80,2x5,2

Putem produce poansoane si matrite cu dimensiuni speciale, distantiere (Fig.1) sau bucse de ghidare a poansonului (Fig.2) realizarea, acestoara bazandu-se pe baza unei schite sau a unui desen furnizat de client.

We can produces punches and dies with special dimensions, punch strippers (Fig.1) or punch guide bushings (Fig.2), their execution being based on a sketch or drawing provided by the costumer.

Fig.1

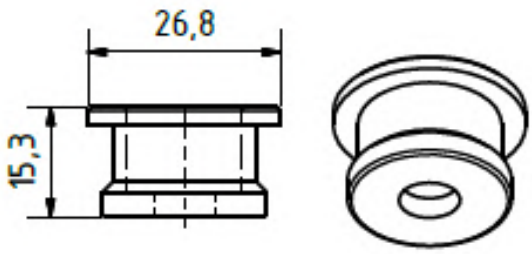

Fig.2

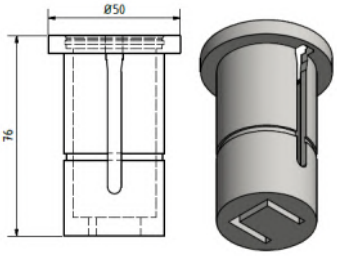

Poansoane si matrite pentru table subtiri - functionare la cadenta mare
Thin metal sheets punches and dies - for high-cadence operations

Poansoane ISO 6752 / *ISO 6752 punches*

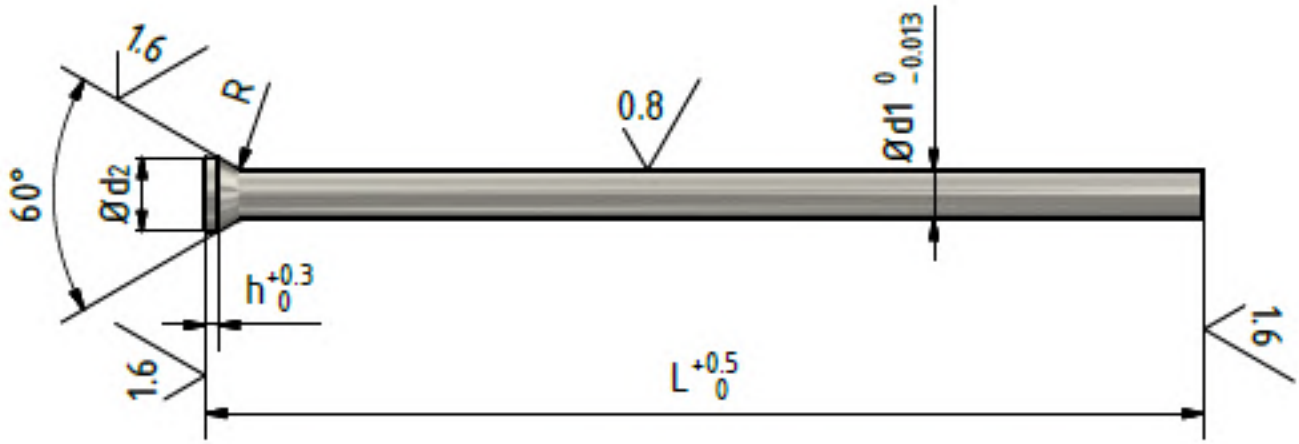

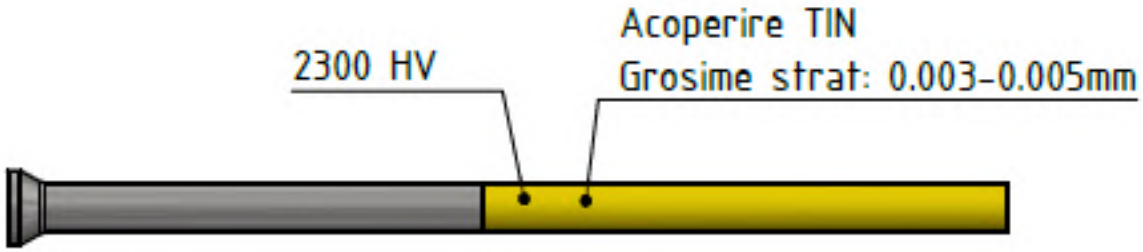

Caracteristici / *Characteristics*

d 1	R	h	d 2	L
3	0.6 - 1	0.5	4.5	59/60/61/71/80
3.1 -3.4	0.6 - 1	0.5	4.5	59/60/61/71/80
5	0.6 - 1	0.5	6.5	59/60/61/71/80
5.1 -5.4	0.6 - 1	0.5	6.5	59/60/61/71/80

Poansoane si matrite pentru table subtiri - functionare la cadenta mare
Thin metal sheets punches and dies - for high-cadence operations

Poansoane rotunde ISO 8020 / *ISO 8020 round punches*

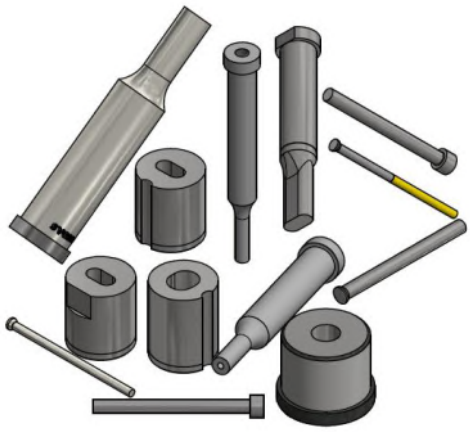

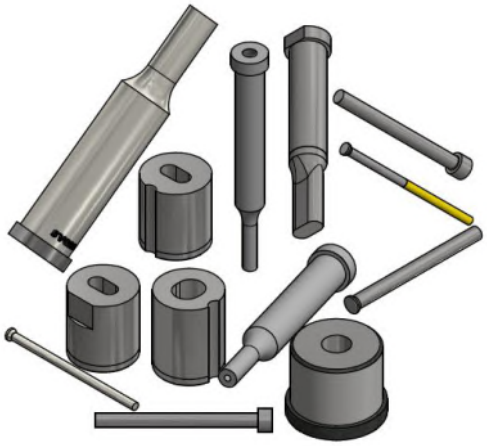

Poansoanele ISO 8020 pot fi realziate cu diametre cuprinse intre 3 si 27 mm. Materialul din care sunt realizate poate fi otel HSS W1.3343 cu 62 HRC sau otel HWS W1.2379 cu 60 HRC.

ISO 8020 punches can be made with diameters between 3 and 27 mm. The material they are made of can be HSS W1.3343 steel with 62 HRC or HWS W1.2379 steel with 60 HRC.

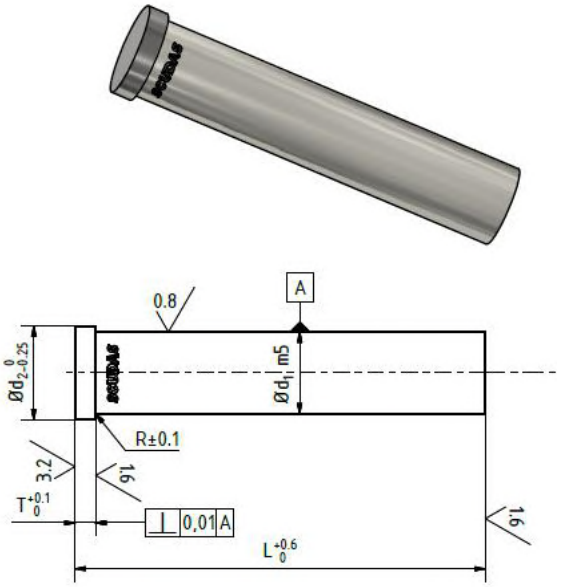

Forma A

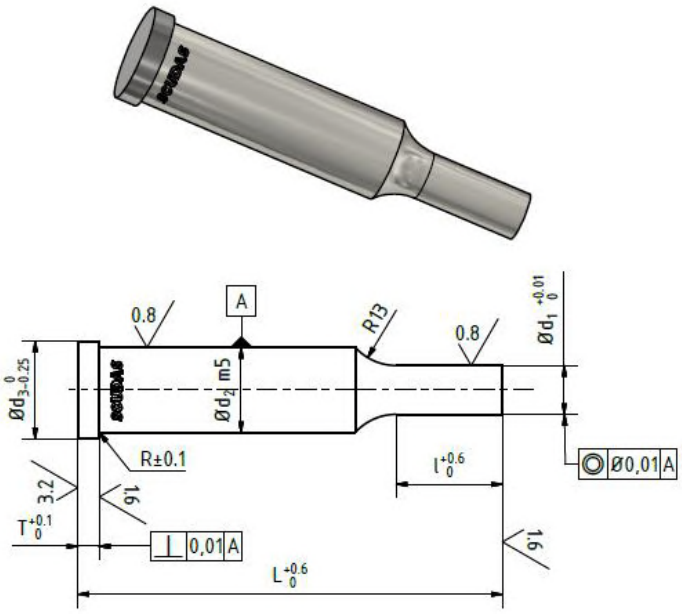

Forma B

Poansoane si matrite pentru table subtiri - functionare la cadenta mare
Thin metal sheets punches and dies - for high-cadence operations

Poansoane rotunde ISO 8020 / *ISO 8020 round punches*

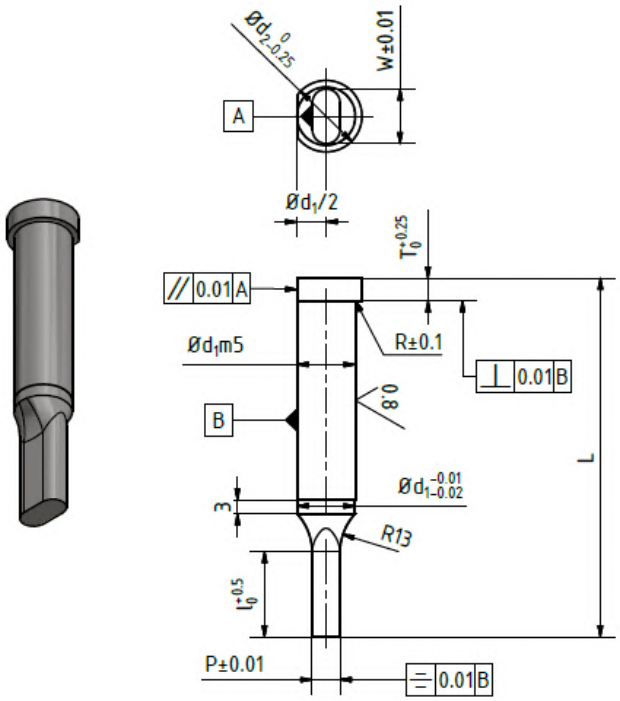

Forma C

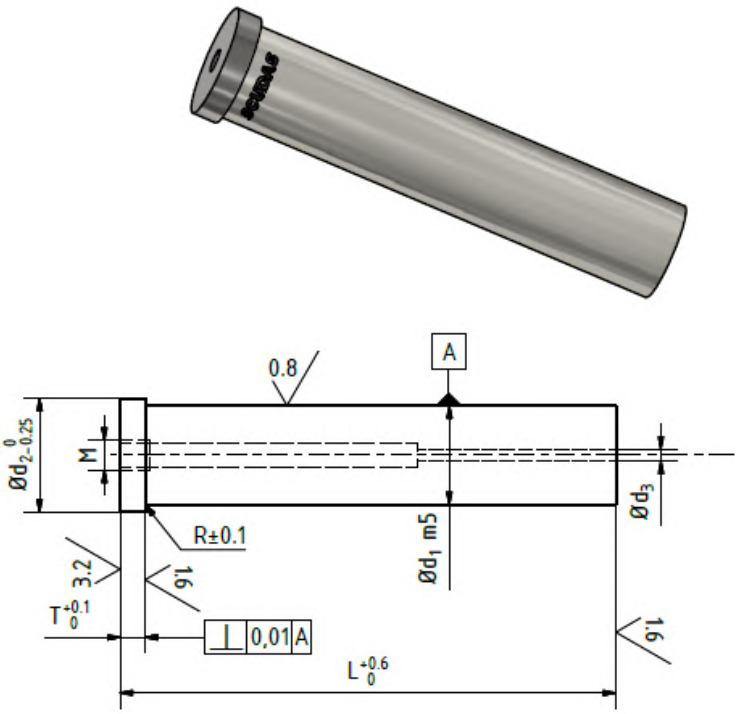

Forma E

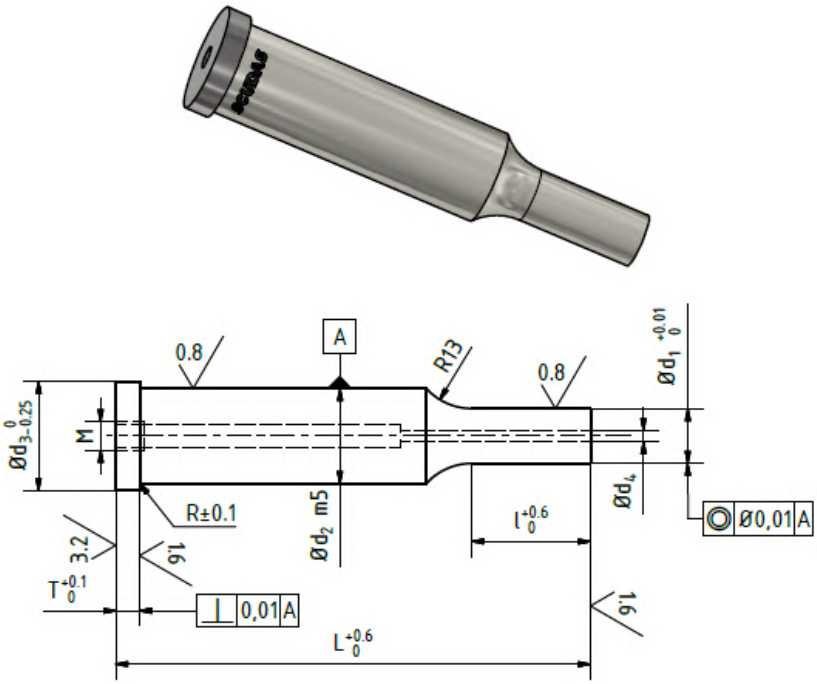

Forma F

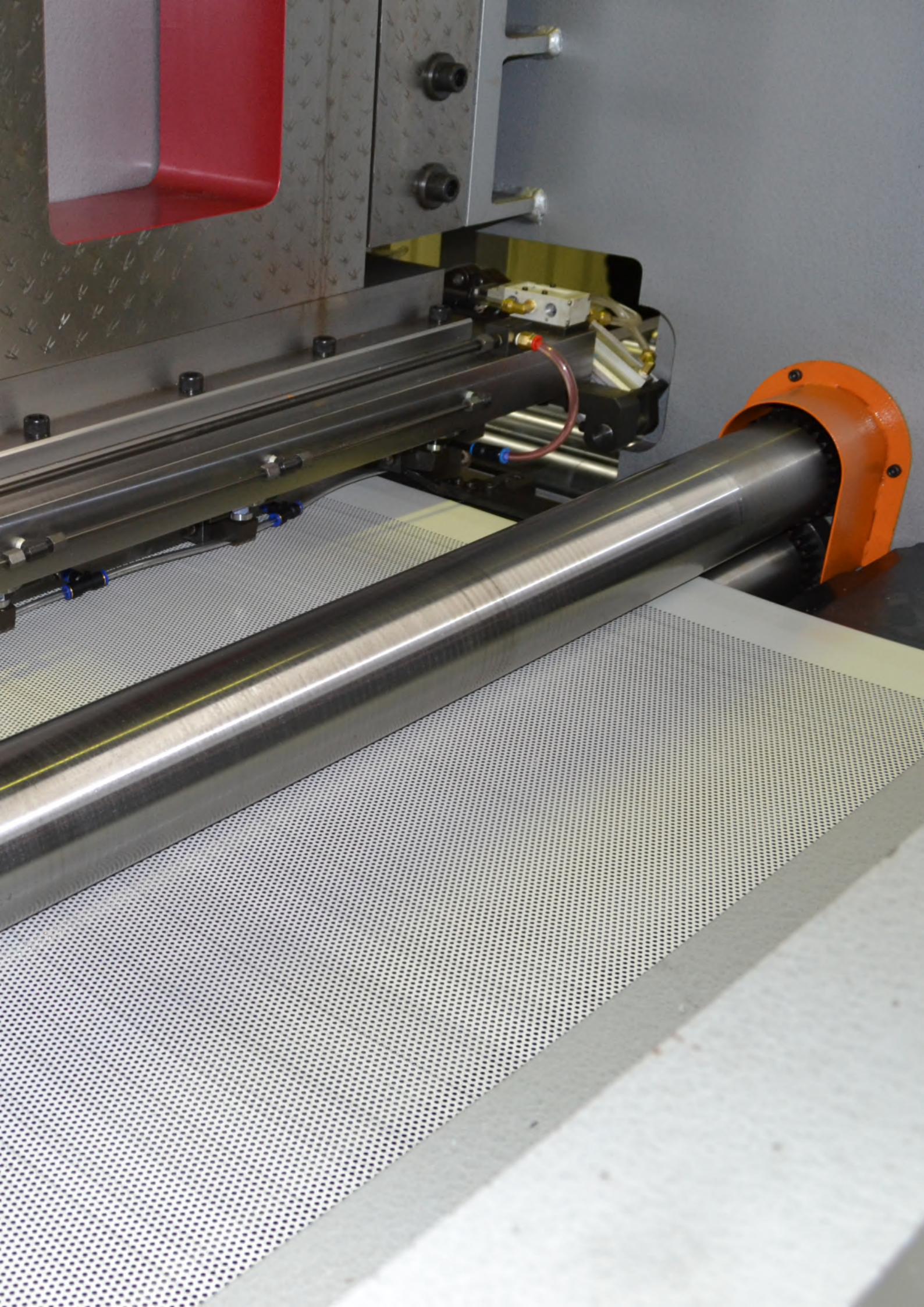

Stante si matrite
Molds and dies

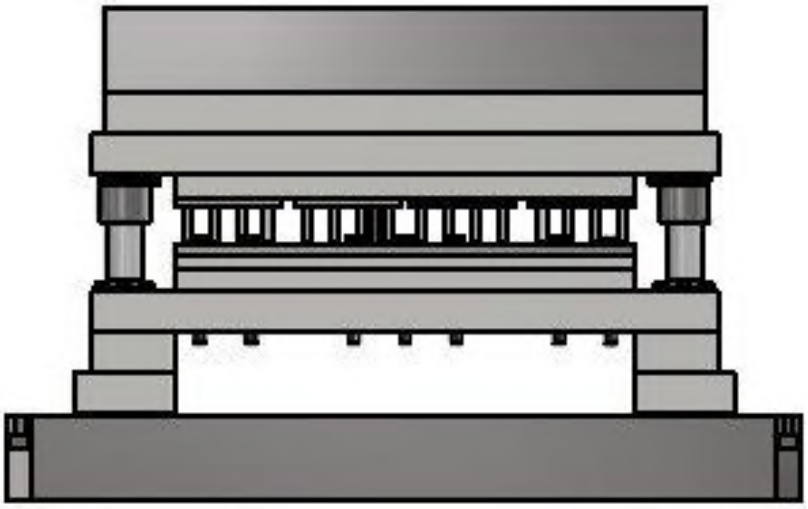

Stantele si matritele sunt echipamente tehnologice folosite pentru prelucrari prin presare la rece.
Utilizarea acestora vizeaza operatii de taiere, decupare si perforare, dar sunt utilizate si pentru alte operatii decat taierea, cum ar fi indoire, ambutisare, nervurare sau crestare.
Stantele si matritele sunt compuse din elemente active care vin direct in contact cu materialelul prelucrat (poansoane, pastile si placi active) respectiv din elemente pasive, care asigura fixarea si ghidarea elementelor active, centrarea lor si pozitionarea semifabricatului.

Elemente active

Poansoanele si bucsele de taiere.

Elemente pasive

Elementele de ghidare: Coloane de ghidare (Fig. 1);
Bucse de ghidare;
Rigle de ghidare.
Elemente de fixare: Cepuri de fixare.
Elemente de sustinere: Placi de baza;
Placi superioare;
Placi suport pentru poansoane.

Capabilitatile Diviziei de Scule, portscule si accesorii din cadrul fabricii Scudas permit realizarea comenzilor speciale venite din partea clientilor. Practic, pe baza schitelor sau modelelor furnizate de clienti putem realiza orice element ce intra in componenta ansambulurilor de stante si matrite, indiferent de tipul de masina pe care acestea se instaleaza.

Dies and molds are technological equipment used for cold pressing.
Their use is aimed at cutting, debiting and punching, but are also used for other operations, such as bending, stamping, riveting or creasing.
Dies and molds are composed of active elements that come in direct contact with the processed material (punches, pills and active boards) and passive elements, which ensure the ffixing of the active elements, their centering and positioning of the semi-finished material.


Fig.1

Active items

Punches and cutter bushings.

Passive elements

Guidance elements: Guiding columns (Fig. 1);
Punch guide bushings;
Guidance rulers.
Fixing elements: Fixing pins.
Support elements: Motherboards;
Upper boards;
Punching boards support.

The capabilities of the Scudas Tooling Division, allows us to realize any special orders from customers. Basically, based on sketches or models provided by our clients, we can make any element that is part of the dies and molds assemblies, regardless of the type of machine they are to installed on.

Stante si matrite
Molds and dies

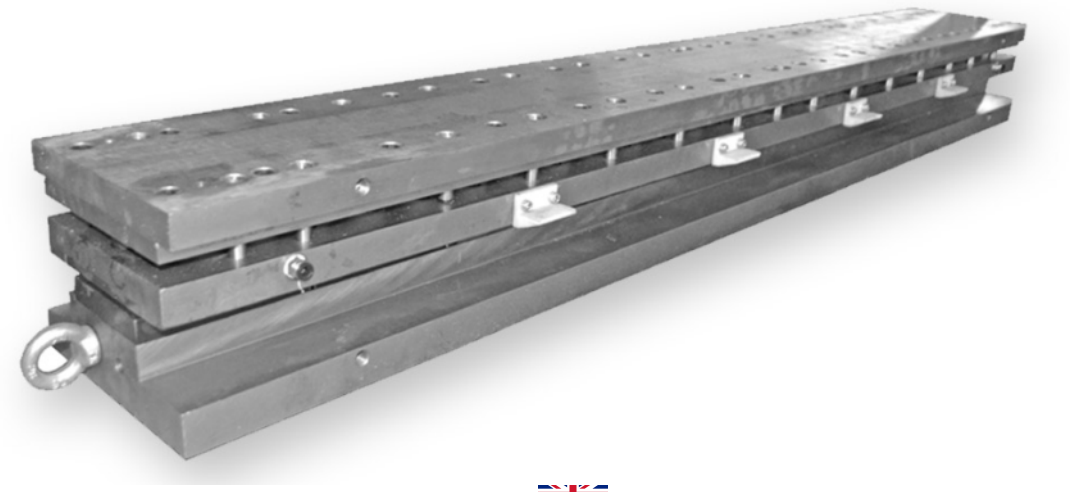

Matrita model 1500/3/7.4 pentru prese JUN-EN

Matrita perforare 1500/3/7.4 este destinata perforarii tablelor cu latimea 1500 mm, cu gauri cu diamentrul de 3 mm, dispuse decalat in triunghi de 7,4 mm.
Grosimea tablei care se va perfora poate fi de 0.7-1.25 mm. Perforarea se face pe toata latimea de 1500 mm. Se pot perfora diverse forme, integal sau partial prin scoaterea de poansoane. Poansoanele sunt executate din HSS (W1.3343), acoperite TIN (nitrura de Titan) pe o lungime de 30 mm. Acoperirea mareste durabilitatea poansonului. Stratul acoperit, in grosime de 3-4 microni, prezinta proprietati lubrifiante (de alunecare) si protejeaza termic poansonul, in zona de ghidare. Poansoanele vor fi schimbate la fiecare stantare conform schemei perforare dorite.

Acesta matrita (Fig.1) se utilizeaza de exemplu pentru obtinerea tablelor cutate sau a casetelor structurale perforate partial sau integal. Acest ansamblu se monteaza pe presa CNC JUN-EN, model “JEC-PLP1600H”.

Die model 1500/3 /7.4 for JUN-EN presses

The punching die 1500/3 / 7.4 is designed for perforating steel sheets with a width of 1500 mm with holes with a diameter of 3 mm, disposed in a 7.4 mm triangle.
The thickness of the metal sheet to be punched can be 0.7-1.25 mm. The perforation is done over the entire width of 1500 mm. Various shapes can be perforated, integrally or partially, by pulling out punches. The punches are made of HSS (W1.3343) coated TIN (titanium nitride) over a 30 mm length. The cover increases the punch's durability. The coating layer, in thicknesses of 3-4 microns, shows lubricating (slip) properties and thermally protects the punch in the guide area.
The punches are to be changed at each punching process according to the desired punching pattern.

This die (Fig.1) is used, for example, to make cut sheets or partially or integrally perforated structural cassettes. This assembly is mounted on CNC JUN-EN press, model "JEC-PLP1600H".

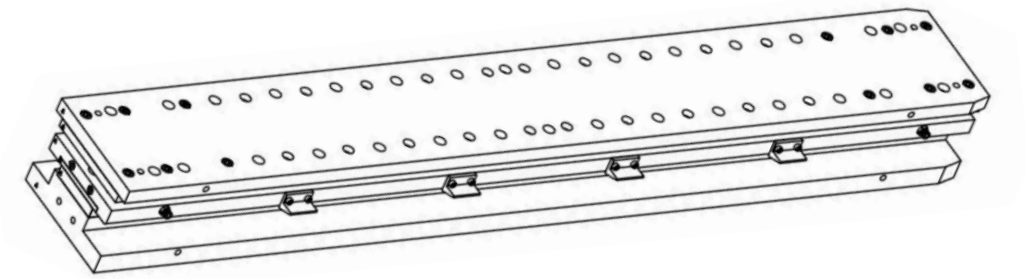

Fig.1

PROINVEST GROUP SRL

Sediu central / *Headquarter*
Gradinitei 1, 705200 Pascani, Romania
T: +40 232 760 050, F: +40 232 760 040
office@proinvestgroup.ro, www.proinvestgroup.ro

Fabrica SCUDAS / *Business unit SCUDAS*

Vatra 80, 705200 Pascani, Romania
T: +40 232 763 700, F: +40 232 766 342
Direct contact: Iulian Pavaloiu
iulian.pavaloiu@proinvestgroup.ro, M: +40 728 282 927
www.scudas.com